Chipsmall Limited consists of a professional team with an average of over 10 year of expertise in the distribution of electronic components. Based in Hongkong, we have already established firm and mutual-benefit business relationships with customers from,Europe,America and south Asia,supplying obsolete and hard-to-find components to meet their specific needs.

With the principle of “Quality Parts,Customers Priority,Honest Operation,and Considerate Service”,our business mainly focus on the distribution of electronic components. Line cards we deal with include Microchip,ALPS,ROHM,Xilinx,Pulse,ON,Everlight and Freescale. Main products comprise IC,Modules,Potentiometer,IC Socket,Relay,Connector.Our parts cover such applications as commercial,industrial, and automotives areas.

We are looking forward to setting up business relationship with you and hope to provide you with the best service and solution. Let us make a better world for our industry!

Contact us

Tel: +86-755-8981 8866 Fax: +86-755-8427 6832
Email & Skype: info@chipsmall.com Web: www.chipsmall.com
Address: A1208, Overseas Decoration Building, #122 Zhenhua RD., Futian, Shenzhen, China

NUMBER C-175472

METRIC — 3rd ANGLE PROJECTION

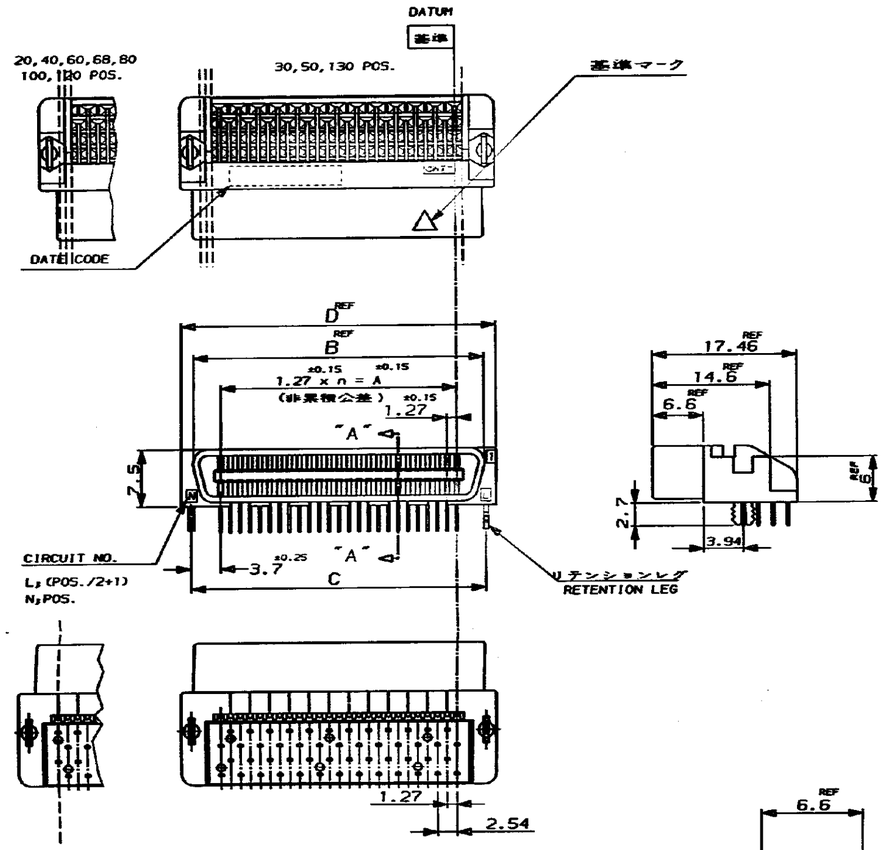

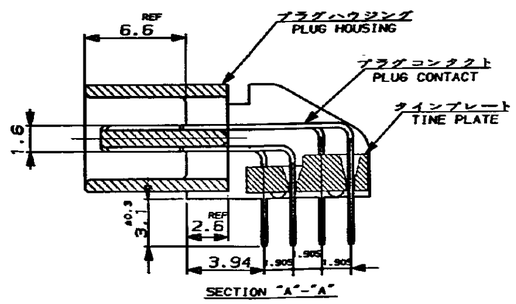

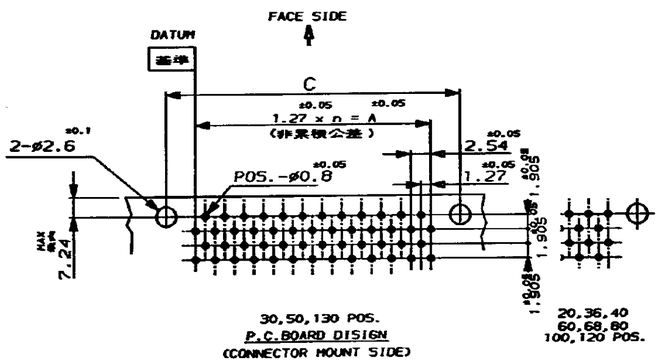

注記；

1. 基板及びコネクタの n 数は、 基準 位置から数える。
(-AMPマーク側が回路番号1番となる。)

2 材料：※ハウジング；ガラス入り66ナイロン
(UL 94V-0) 色、黒。
※コンタクト：燐青銅。
※リテンションレグ：黄銅。

3 表面仕上げ；
※コンタクト：全面1.3μ以上のニッケル下地メッキに接触部金メッキ（表参照）脚部1μ以上の半田メッキ
※リテンションレグ：1.3μ以上のニッケル下地メッキに2μ以上の半田メッキ。

NOTE

1. NUMBER "n" IS COUNTED FROM DATUM
(CIRCUIT NO.1 IS "AMP" MARK SIDE.)

2 MATERIAL: HOUSING; 66 NYLON (GF) UL 94V-0, BLACK.
: CONTACT; PHOSPHOR BRONZE.
: RETENTION LEG; BRASS.

3 FINISH: CONTACT; Au AT CONTACT AREA (SEE TABLE), TIN LEAD AT TINE OVER Ni.
RETENTION LEG; TIN LEAD UNDER Ni.

PART NO.		Au PLATE	POS.	n	A	B	C	D
6-	-2	↑	130	64	81.28	89.62	88.68	92.48
6-	-1		120	59	74.93	83.27	82.33	86.13
6-	-0		100	49	62.23	70.57	69.63	73.43
5-	-9		80	39	49.53	57.87	56.93	60.73
5-	-8		68	33	41.91	50.25	49.31	53.11
5-	-7		60	29	36.83	45.17	44.23	48.03
5-	-6		50	24	30.48	38.82	37.88	41.68
5-	-5		40	19	24.13	32.47	31.53	35.33
5-	-4		36	17	21.59	29.93	28.99	32.79
5-	-3		30	14	17.78	26.12	25.18	28.98
5-	-1	0.76μ	20	9	11.43	19.77	18.83	22.63
4-	-2	↑	130	64	81.28	89.62	88.68	92.48
4-	-1		120	59	74.93	83.27	82.33	86.13
4-	-0		100	49	62.23	70.57	69.63	73.43
3-	-9		80	39	49.53	57.87	56.93	60.73
3-	-8		68	33	41.91	50.25	49.31	53.11
3-	-7		60	29	36.83	45.17	44.23	48.03
3-	-6		50	24	30.48	38.82	37.88	41.68
3-	-5		40	19	24.13	32.47	31.53	35.33
3-	-4		36	17	21.59	29.93	28.99	32.79
3-	-3		30	14	17.78	26.12	25.18	28.98
3-	-1	0.5μ	20	9	11.43	19.77	18.83	22.63
1-	-2	↑	130	64	81.28	89.62	88.68	92.48
1-	-1		120	59	74.93	83.27	82.33	86.13
1-	-0		100	49	62.23	70.57	69.63	73.43
	-9		80	39	49.53	57.87	56.93	60.73
	-8		68	33	41.91	50.25	49.31	53.11
	-7		60	29	36.83	45.17	44.23	48.03
	-6		50	24	30.48	38.82	37.88	41.68
	-5		40	19	24.13	32.47	31.53	35.33
	-4		36	17	21.59	29.93	28.99	32.79
	-3		30	14	17.78	26.12	25.18	28.98
175472-1		0.2μ	20	9	11.43	19.77	18.83	22.63

LTR	REVISION RECORD	DR	CHK	DATE
C	REVISED ECN J-1583	T.N	Y.F	4-OCT-'92
B	REVISED ECN J-12001	T.N	Y.F	19-NOV-'90
A	REVISED ECN J-12103	H.K	Y.F	28-SEP-'89
0	REVISED ECN J-10612	S.I	Y.F	8-8-'89

AMP (JAPAN), LTD. Tokyo, Japan

WIRE RANGE | INSULATION DIA | MATERIAL 2 | FINISH 3

NAME: AMP CHAMP.050 CONECTOR (B-T-B)
PLUG CONNECTOR (HORIZONTAL WITH RETENTION LEG)

GENERAL TOLERANCE: 0<=< 10 : ±0.2; 10<=< 30 : ±0.25; 30<=<100 : ±0.3; ANGLES : ±3°

DR. 5-AUG.-'89 S.Ishikawa | DE. | CHK. 29-SEP-'89 Y.FUJIURA | APP. 3-OCT-'89 R.NISHIMURA

SIZE C | LOC J | NUMBER C-175472 | SCALE — | REV. C | SHEET 1 OF 1

CUSTOMER DRAWING

DIMENSIONS IN MILLIMETERS. DO NOT SCALE PRINT

PRINT DIST

AMP-1 REV.10/'89