Chipsmall Limited consists of a professional team with an average of over 10 year of expertise in the distribution of electronic components. Based in Hongkong, we have already established firm and mutual-benefit business relationships with customers from,Europe,America and south Asia,supplying obsolete and hard-to-find components to meet their specific needs.

With the principle of “Quality Parts,Customers Priority,Honest Operation,and Considerate Service”,our business mainly focus on the distribution of electronic components. Line cards we deal with include Microchip,ALPS,ROHM,Xilinx,Pulse,ON,Everlight and Freescale. Main products comprise IC,Modules,Potentiometer,IC Socket,Relay,Connector.Our parts cover such applications as commercial,industrial, and automotives areas.

We are looking forward to setting up business relationship with you and hope to provide you with the best service and solution. Let us make a better world for our industry!

Contact us

Tel: +86-755-8981 8866 Fax: +86-755-8427 6832
Email & Skype: info@chipsmall.com Web: www.chipsmall.com
Address: A1208, Overseas Decoration Building, #122 Zhenhua RD., Futian, Shenzhen, China

THIS DRAWING IS UNPUBLISHED. RELEASED FOR PUBLICATION -,- .
© COPYRIGHT - By - ALL RIGHTS RESERVED.

LOC	DIST
GP	00

REVISIONS

P	LTR	DESCRIPTION	DATE	DWN	APVD
	G	REVISED PER ECO-12-009966	06JUN2012	CJV	SLB

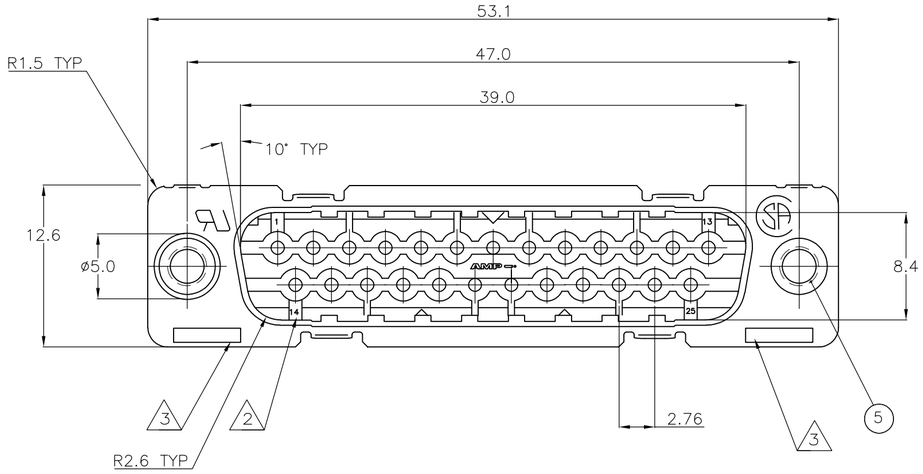

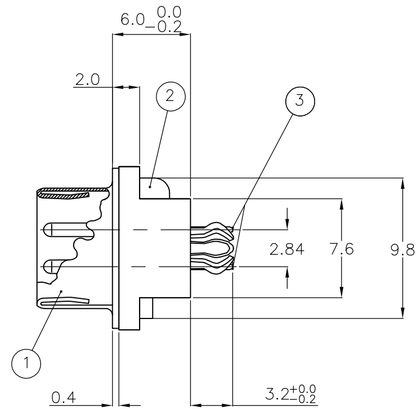

	ITEM NO	DESCRIPTION OF ACCESSORY	–	1-338311-2	2-338311-2	3-338311-2	4-338311-2	5-338311-2	6-338311-2	7-338311-2	8-338311-2	9-338311-2
ACCESSORIES	5	BUSHING WITH THROUGH HOLE ø3.1						2				
	5	BUSHING WITH THREAD 4-40 UNC		2					2			
	5	BUSHING WITH THREAD M3			2					2		
	4	FEMALE SCREWLOCK WITH THREAD 4-40 UNC				2					2	
	4	FEMALE SCREWLOCK WITH THREAD M3					2					2
	6	BOARDLOCK		2	2	2	2					
											OBSOLETE	OBSOLETE

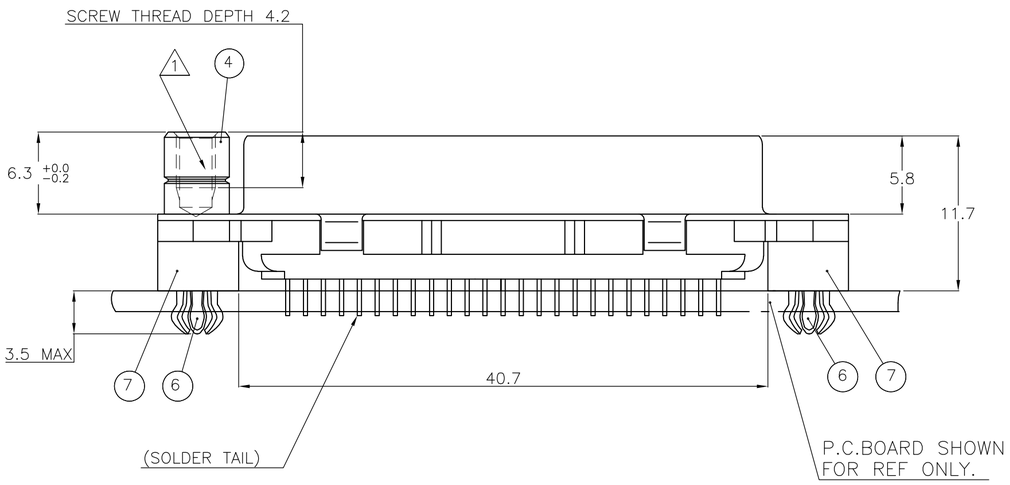

1. GROOVE INDICATES VERSION WITH 4-40 UNC INNER THREAD; WITHOUT GROOVE INDICATES VERSION WITH M3 INNER THREAD.
2. CAVITY IDENTIFICATION AT FRONT SIDE ONLY.
3. PART NUMBER AND DATE CODE.
4. WHEN BOARDLOCKS ARE USED, CONNECTOR CAN BE USED FOR PCB THICKNESS OF 1.6 ONLY.
5. SHELL HAS 2x8 GROUNDING SPRINGS; PITCH IS 3.6.
6. AIR AND CREEPAGE DISTANCES ACCORDING TO DIN 41652.
7. GOLD FLASH OVER PALLADIUM-NICKEL PLATE OR GOLD PLATE ON THE MATING SURFACES, TIN PLATE ON THE SOLDER-TAILS, NICKEL UNDERPLATE ON THE ENTIRE CONTACT. MATING SURFACE FINISH MEETS LEVEL 2 PERFORMANCE PER DIN 41652.

338311

ITEM NO/MATERIAL :

1	SHELL	: BRIGHT TIN PLATED STEEL
2	HOUSING	: GLASS FILLED POLYESTER, COLOR : BLACK
3	CONTACTS	: PHOSPHOR BRONZE (PLATING : SEE NOTES ABOVE)
4	FEMALE SCREWLOCK	: TIN PLATED STEEL (INNER THREAD 4-40 UNC OR M3)
5	BUSHING	: TIN PLATED STEEL (INNER THREAD 4-40 UNC OR M3 OR 3,1 DIA. THROUGH HOLE)
6	BOARDLOCK	: TIN PLATED PHOSPHOR BRONZE
7	STAND-OFF	: GLASS FILLED NYLON COLOR : BLACK

RECOMMENDED P.C. BOARD HOLE-LAYOUT

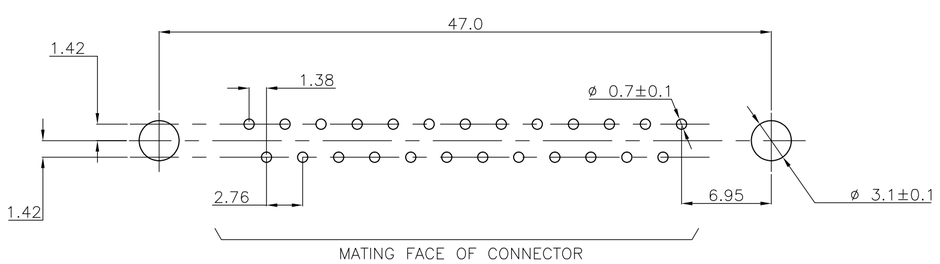

THIS DRAWING IS A CONTROLLED DOCUMENT.
DIMENSIONING AND TOLERANCING PER ASME Y14.5M-2009

DIMENSIONS: mm

TOLERANCES UNLESS OTHERWISE SPECIFIED:
0 PLC ± –
1 PLC ± 0.3
2 PLC ± 0.15
3 PLC ± –
4 PLC ± –
ANGLES ± –

MATERIAL –
FINISH –

DWN J.v.LIEMPT 03JUL97
CHK C.SOUISA –
APVD E.LEIJTENS –
PRODUCT SPEC —
APPLICATION SPEC —
WEIGHT —

TE Connectivity

NAME HDP-20 SIZE 3 VERTICAL+ PLUG HEADER; WITH SOLDER CONTACTS

SIZE	CAGE CODE	DRAWING NO	RESTRICTED TO
A2	00779	C-338311	—

CUSTOMER DRAWING | SCALE NTS | SHEET 1 OF 1 | REV G

1471-9 (3/11)