Chipsmall Limited consists of a professional team with an average of over 10 year of expertise in the distribution of electronic components. Based in Hongkong, we have already established firm and mutual-benefit business relationships with customers from,Europe,America and south Asia,supplying obsolete and hard-to-find components to meet their specific needs.

With the principle of “Quality Parts,Customers Priority,Honest Operation,and Considerate Service”,our business mainly focus on the distribution of electronic components. Line cards we deal with include Microchip,ALPS,ROHM,Xilinx,Pulse,ON,Everlight and Freescale. Main products comprise IC,Modules,Potentiometer,IC Socket,Relay,Connector.Our parts cover such applications as commercial,industrial, and automotives areas.

We are looking forward to setting up business relationship with you and hope to provide you with the best service and solution. Let us make a better world for our industry!

Contact us

Tel: +86-755-8981 8866 Fax: +86-755-8427 6832
Email & Skype: info@chipsmall.com Web: www.chipsmall.com
Address: A1208, Overseas Decoration Building, #122 Zhenhua RD., Futian, Shenzhen, China

DRAWING MADE IN THIRD ANGLE PROJECTION

© COPYRIGHT 1973 BY AMP INCORPORATED, HARRISBURG, PA.
ALL INTERNATIONAL RIGHTS RESERVED. AMP INCORPORATED PRODUCTS COVERED BY U. S. AND FOREIGN PATENTS AND/OR PATENTS PENDING.

Unpublished copy not to be reproduced nor published without written permission of AMP Incorporated

LOC	DIST
L	37

REVISIONS

P	F	ZONE	LTR	DESCRIPTION	DATE	APPROVED
			A	ADDED .468 DIA., .38, 2.00, ECN 8041, DS	5-19-75	
			B	REMOVED -2 WAS GOLD PLATED. DS	5-19-78	
	✓		C	REV PER ECN S-3960	4-10-87	RB
			D	REVISED PER OH14-0192-05	1-06	PY
			E	REV PER ECO-12-009412 PY	6-21-1	DE

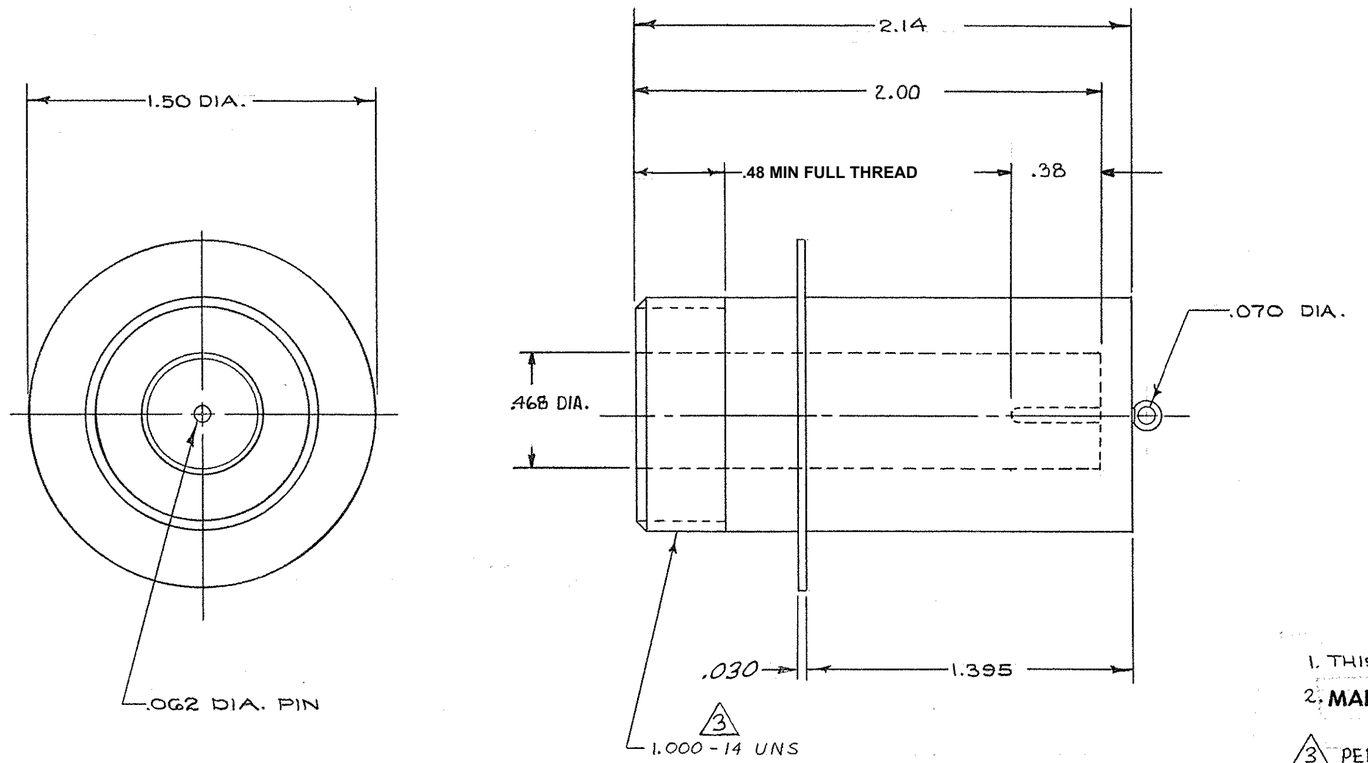

1. THIS RECEPTACLE IS HERMETICALLY SEALED
2. MARK PER AMP SPEC. 118-36000 (WHITE INK)
3. PER FEDERAL STANDARD H-28 3 WIRE METHOD. DIMENSION OVER WIRES TO BE: .9975 - 1.0186.

AS SHOWN WITH TIN PLATED PIN & FLANGE	5-861258-1
AS SHOWN WITH TIN-LEAD PLATED PIN & FLANGE	861258-1
	PART NO

NEXT ASSY	FINAL ASSY	NEXT ASSY	USED ON
QTY REQD		APPLICATION	

UNLESS OTHERWISE SPECIFIED DIMENSIONS ARE IN INCHES.
TOLERANCES:
.00 ±.01 .000 ±.005
ANGLES ±

MATERIAL: MOLDED GLASS EPOXY

FINISH: BLACK

CONTRACT NO

DR: D. Meyer 7/26/73

CHK

APPD: RE Fry 7-31-73

APPD

DSGN APPD

OTHER APPD

AMP INCORPORATED Elizabethtown, Pa.

NAME: RECEPTACLE, FLANGED LGH-4

SIZE	CODE IDENT NO	NUMBER	REV
C	89110	861258	E
SCALE 2:1	WT		SHEET 1 OF 1

UP-DATED

AMP 1471-5 (1-73)

CUSTOMER DRAWING