Chipsmall Limited consists of a professional team with an average of over 10 year of expertise in the distribution of electronic components. Based in Hongkong, we have already established firm and mutual-benefit business relationships with customers from,Europe,America and south Asia,supplying obsolete and hard-to-find components to meet their specific needs.

With the principle of “Quality Parts,Customers Priority,Honest Operation,and Considerate Service”,our business mainly focus on the distribution of electronic components. Line cards we deal with include Microchip,ALPS,ROHM,Xilinx,Pulse,ON,Everlight and Freescale. Main products comprise IC,Modules,Potentiometer,IC Socket,Relay,Connector.Our parts cover such applications as commercial,industrial, and automotives areas.

We are looking forward to setting up business relationship with you and hope to provide you with the best service and solution. Let us make a better world for our industry!

Contact us

Tel: +86-755-8981 8866 Fax: +86-755-8427 6832
Email & Skype: info@chipsmall.com Web: www.chipsmall.com
Address: A1208, Overseas Decoration Building, #122 Zhenhua RD., Futian, Shenzhen, China

Materials

1. Tip, brass, 0.03 microns gold plating
2. Ring 1, brass, 0.03 microns gold plating
3. Insulator, POM, black
4. Ring 2, brass, 0.03 microns gold plating
5. Shell, brass, 0.03 microns gold plating
6. Insulator, POM, black
7. Outer Ring, brass, 0.03 microns gold plating
8. Inner Ring, brass, 2 micron nickel plating

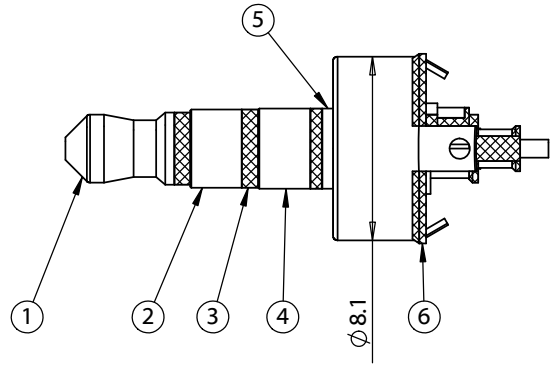

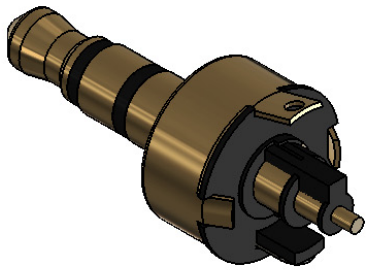

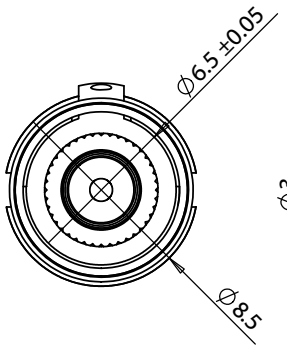

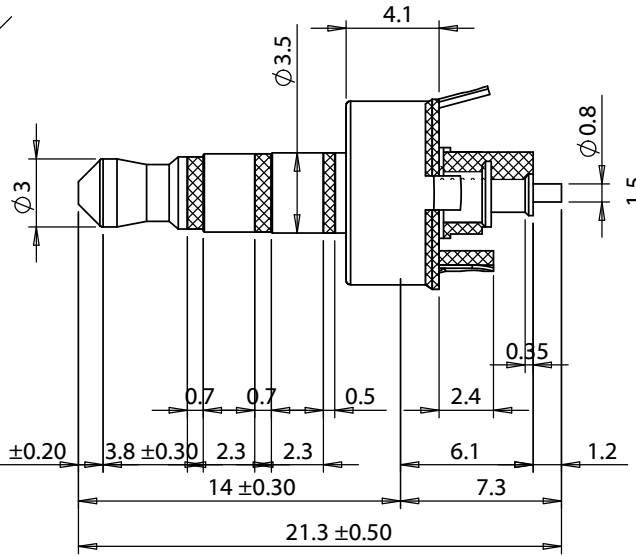

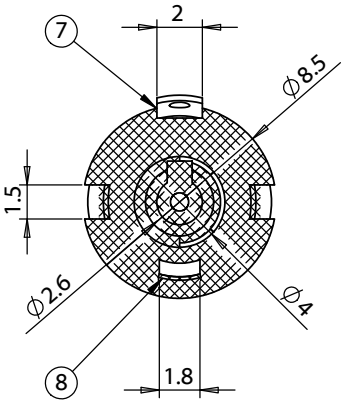

REVISION	DATE	DESCRIPTION
A	5/11/2009	Initial release
A1	8/6/2013	revised spec to show correct plating
A2	5/14/2015	revised part tooling, changed plating thickness

PREPARED:
JM
2015.05.15 10:27:55 -07'00'

VERIFIED:
AG
2015.05.15 10:51:18 -07'00'

DIMENSIONS ARE IN MILLIMETERS

TOLERANCES:
X: ± 0.5 mm
X.X: ± 0.3 mm
X.XX: ± 0.05 mm

NOTES
RoHS and REACH compliant

Function test: no open, no short circuit, no INT

DESCRIPTION:
Connector, 6C double rings audio plug, 3.5xL26.6 mm, brass Au plated, molding style

TENSILITY

20802 Sockeye Place #130
Bend, OR 97701 USA
tel 541.323.3228 *fax* 541.323.4202
800 877.670.7118 www.tensility.com

SIZE	PART NUMBER
A	**50-00009**

SCALE: 5:1	WEIGHT:	SHEET 1 OF 1

5 4 3 2 1