Chipsmall Limited consists of a professional team with an average of over 10 year of expertise in the distribution of electronic components. Based in Hongkong, we have already established firm and mutual-benefit business relationships with customers from,Europe,America and south Asia,supplying obsolete and hard-to-find components to meet their specific needs.

With the principle of “Quality Parts,Customers Priority,Honest Operation,and Considerate Service”,our business mainly focus on the distribution of electronic components. Line cards we deal with include Microchip,ALPS,ROHM,Xilinx,Pulse,ON,Everlight and Freescale. Main products comprise IC,Modules,Potentiometer,IC Socket,Relay,Connector.Our parts cover such applications as commercial,industrial, and automotives areas.

We are looking forward to setting up business relationship with you and hope to provide you with the best service and solution. Let us make a better world for our industry!

Contact us

Tel: +86-755-8981 8866 Fax: +86-755-8427 6832
Email & Skype: info@chipsmall.com Web: www.chipsmall.com
Address: A1208, Overseas Decoration Building, #122 Zhenhua RD., Futian, Shenzhen, China

Materials
1. Center contact, C5191 phosphor bronze, 2 µm nickel plated
2. Insulator, PBT + 15% glass fiber, black
3. Shell, C2700 brass, 2 µm nickel plated

Electrical requirements
Dielectric strength: 1 min @ 500 Vac
Insulation resistance: 100 MΩ @ 500 Vdc
Contact resistance: 30 mΩ or less
Rated voltage: 20 Vdc
Rated current: 6 A

Mechanical requirements
Insertion force: 0.5-3 kgf
Withdrawal force: 0.4-2 kgf
Durability: 5000 mating cycles while maintaining; 0.3-2 kgf insertion force, 0.2-1.5 kgf withdrawal force and a less than 100 mΩ contact resistance.

Environmental requirements
Damp test: 40 °C, RH 90-100% for 96 hrs. Cool to ambient and recover for 2 hours. Maintain dielectric strength of 500 Vac for 1 min, insulation resistance of 50 MΩ @ 500 Vdc minimum and a contact resistance of 100 mΩ or less.

Dry test: 70 °C, RH 70-85% for 96 hrs. Cool to ambient and recover for 2 hours. Maintain insulation resistance of 50 MΩ @ 500 Vdc minimum and a contact resistance of 100 mΩ or less.

Salt spray test: 35 °C, RH 90-95%, 5% NaCl mist for 24 hrs. Wash parts after test. Maintain mechanical requirements and a contact resistance of less than 80 mΩ.

Operating range
-25 to 70 °C, relative humidity of 85% or less

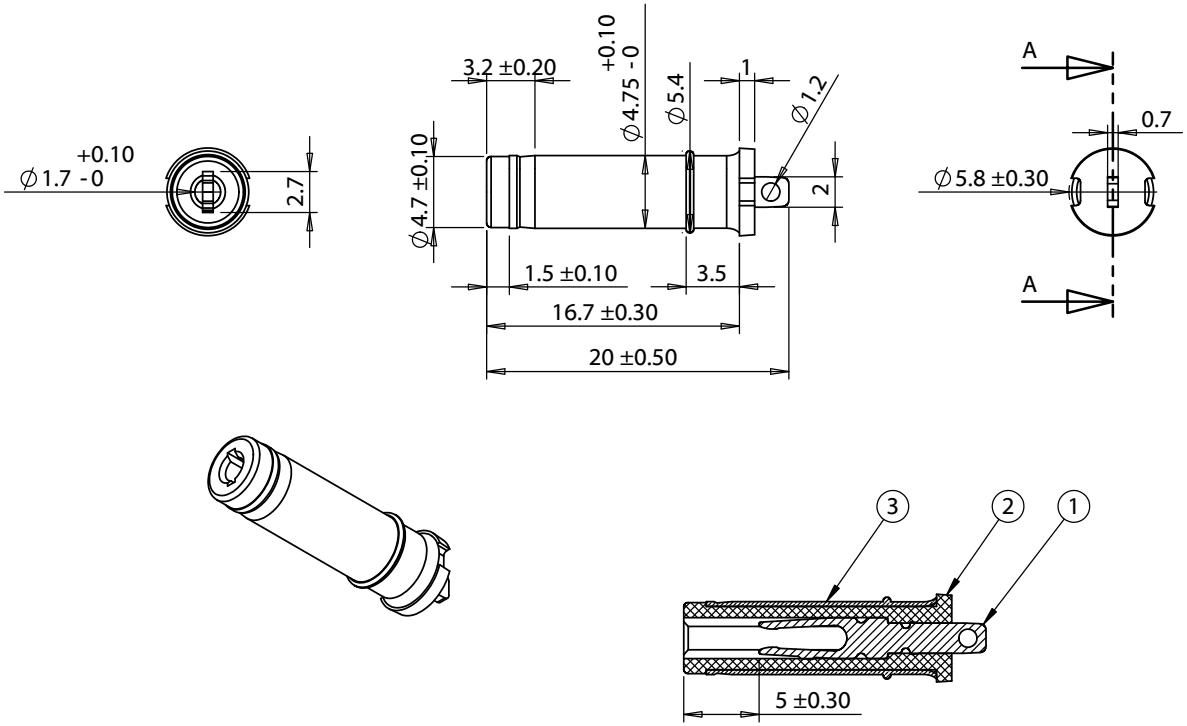

SECTION A-A
SCALE 2 : 1

Revision:	Date:	Description:
A	9/2/2009	Initial release
A1	11/9/2012	Added test data

Prepared: GL 2016.03.29 10:23:18 -07'00'

Verified: LA Digitally signed by LA DN: cn=LA, o=Tensility, ou=Engineering, email=QA002@Tensility.com, c=US Date: 2016.03.31 10:38:04 -07'00'

Dimensions are in millimeters.
Tolerances:
X: ± 0.5 mm
X.X: ± 0.3 mm
X.XX: ± 0.05 mm

Notes:
RoHS and REACH compliant

Function test: no open, no short circuit, no intermittent

Description:
Connector, dc plug, 4.75x1.7xL20 mm, EIAJ-3, molding style, spring contacts

TENSILITY
tel 1.541.323.3228 800 877.670.7118
fax 1.541.323.4202 web tensility.com

Size: A
Part number: 50-00028
Scale: 5:1
Sheet 1 of 1

5 4 3 2 1