Chipsmall Limited consists of a professional team with an average of over 10 year of expertise in the distribution of electronic components. Based in Hongkong, we have already established firm and mutual-benefit business relationships with customers from,Europe,America and south Asia,supplying obsolete and hard-to-find components to meet their specific needs.

With the principle of “Quality Parts,Customers Priority,Honest Operation,and Considerate Service”,our business mainly focus on the distribution of electronic components. Line cards we deal with include Microchip,ALPS,ROHM,Xilinx,Pulse,ON,Everlight and Freescale. Main products comprise IC,Modules,Potentiometer,IC Socket,Relay,Connector.Our parts cover such applications as commercial,industrial, and automotives areas.

We are looking forward to setting up business relationship with you and hope to provide you with the best service and solution. Let us make a better world for our industry!

Contact us

Tel: +86-755-8981 8866 Fax: +86-755-8427 6832
Email & Skype: info@chipsmall.com Web: www.chipsmall.com
Address: A1208, Overseas Decoration Building, #122 Zhenhua RD., Futian, Shenzhen, China

Ratings
Voltage: 24 Vdc
Current: 7 A

Operating Temperature Range
-25° to 70° C , relative humidity of 85% or less

Materials
1. Insulator: PBT +15% GF, black
2. Center pin: C2680 brass, 2 µm nickel plated
3. Shell: C3604 brass, 2 µm nickel plated
4. Nut: C3604 brass, 2 µm nickel plated

Electrical Requirements
Dielectric strength: 1 min @ 500 Vac
Insulation resistance: 100 MΩ @ 500 Vdc
Contact resistance: 30 mΩ or less

Mechanical Requirements
Insertion force: 0.3-3 kgf
Withdrawal force: 0.3-3 kgf
Life cycle: 5000 mating cycles while maintaining 0.3-2 kgf insertion force, 0.2-1.5 kgf withdrawal force and less than 100 mΩ contact resistance.

Environmental Requirements
Heat test: 70 °C, relative humidity 70-85% for 96 hours without deformation while maintaining contact resitance after test 100 mohms or less, and insulation resistance 50 Mohms/500 Vdc minimum
Humidity test: 40 °C, relative humidity 90-100% for 96 hours without deformation while maintaining dielectric strength 500 Vac/1 minute, insulation resistance 50 Mohms/500 Vdc minimum, and contact resistance 100 mohms or less
Salt spray test: 35±2 °C, relative humidity 90-95%, 5% NaCl mist for 24 hrs. Wash parts after test. Maintain mechanical requirements and a contact resistance of less than 80 mΩ.

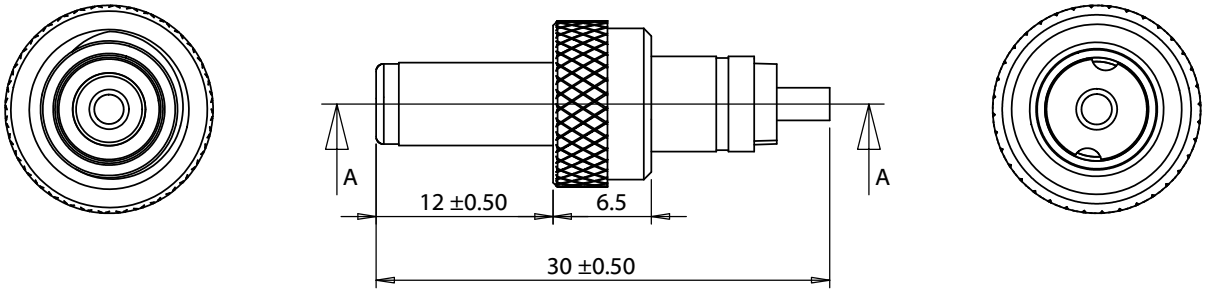

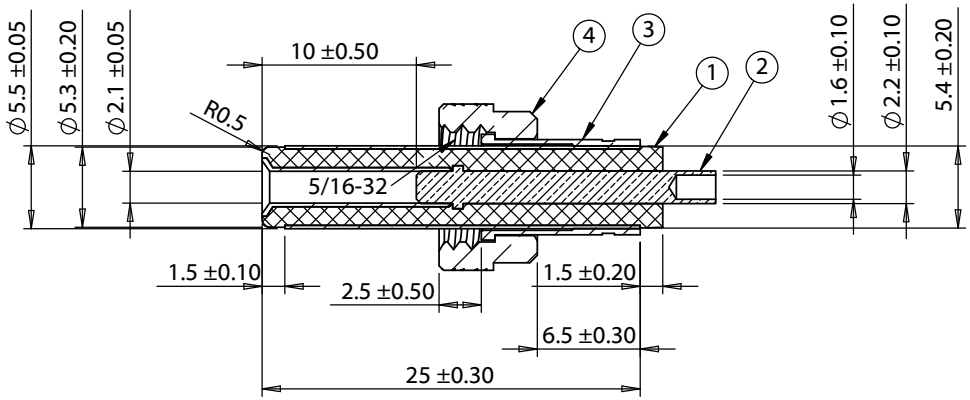

SECTION A-A

Revision:	Date:	Description:
A	6/30/2010	Initial release
A1	11/20/2017	Updated specifications

Prepared: AG — Digitally signed by AG Date: 2017.11.27 15:37:24 -08'00'

Verified: PS — Digitally signed by PS Date: 2017.11.27 16:54:33 -08'00'

Dimensions are in millimeters.
Tolerances:
X: ± 0.5 mm
X.X: ± 0.3 mm
X.XX: ± 0.05 mm

Notes:
RoHS and REACH compliant

Function test: no open, no short circuit, no intermittent

Description:
Connector, dc plug, 5.5x2.1xBL12xL30 locking style, brass nickel plated, threaded nut 5/16-32

TENSILITY
tel 1.541.323.3228 800 877.670.7118
fax 1.541.323.4202 web tensility.com

Size: A
Part number: 50-00103
Scale: 2:1
Sheet 1 of 1

5 4 3 2 1