Chipsmall Limited consists of a professional team with an average of over 10 year of expertise in the distribution of electronic components. Based in Hongkong, we have already established firm and mutual-benefit business relationships with customers from,Europe,America and south Asia,supplying obsolete and hard-to-find components to meet their specific needs.

With the principle of “Quality Parts,Customers Priority,Honest Operation,and Considerate Service”,our business mainly focus on the distribution of electronic components. Line cards we deal with include Microchip,ALPS,ROHM,Xilinx,Pulse,ON,Everlight and Freescale. Main products comprise IC,Modules,Potentiometer,IC Socket,Relay,Connector.Our parts cover such applications as commercial,industrial, and automotives areas.

We are looking forward to setting up business relationship with you and hope to provide you with the best service and solution. Let us make a better world for our industry!

Contact us

Tel: +86-755-8981 8866 Fax: +86-755-8427 6832
Email & Skype: info@chipsmall.com Web: www.chipsmall.com
Address: A1208, Overseas Decoration Building, #122 Zhenhua RD., Futian, Shenzhen, China

Materials
1. C3604 brass, nickel plated
2. C2680 brass, nickel plated
3. C3604 brass, nickel plated
4. POM, white

Electrical requirements
Dielectric strength: 1 min @ 500 Vac and 2mA
Insulation resistance: 100 MΩ @ 500 Vdc
Contact resistance: 50 mΩ or less

Mechanical requirements
Durability: 5000 mating cycles while maintaining normal operation and < 50mΩ
Bending strength: ≥ 3.2 kg
Breaking strength: ≥ 6.8 kg

Environmental tests
Salt spray test: 5% NaCl spray at 1ml/80cm²/h, chamber temp 46.5°C, spray temp 35°C, 87% humidity, 48 hours. No oxidation.

Cold resistance: -25°C±3 for 2 hours with no degradation.
Heat resistance: 85°C±3 for 2 hours with no degradation.

Operating range
-30 to 85 °C

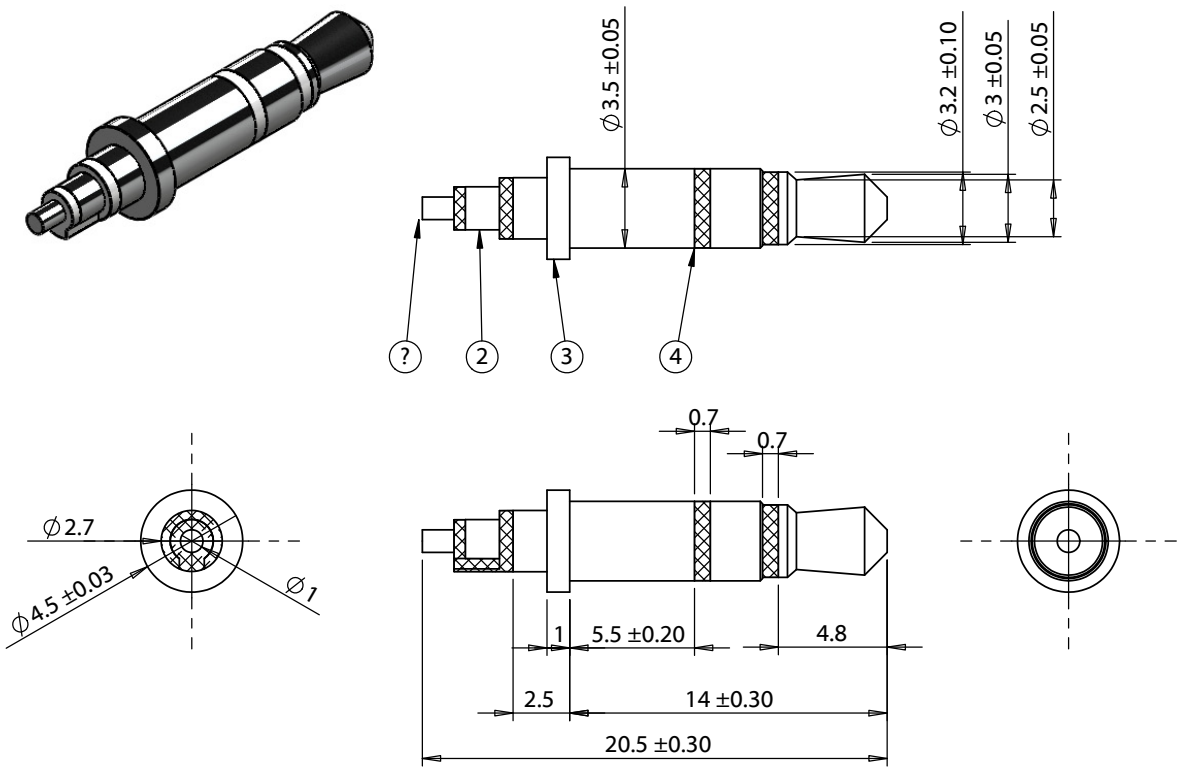

REVISION	DATE	DESCRIPTION
A	3/10/14	Initial release

PREPARED:
JM
2014.03.10 10:07:12 -07'00'

VERIFIED:
LA
Digitally signed by LA
DN: cn=LA, o=Tensility, ou, email=QA0001@tensility.com, c=US
Date: 2014.03.10 11:48:19 -07'00'

DIMENSIONS ARE IN MILLIMETERS

TOLERANCES:
X: ± 0.5 mm
X.X: ± 0.3 mm
X.XX: ± 0.05 mm

NOTES
RoHS and REACH compliant

Function test: no open, no short circuit, no INT

DESCRIPTION:
Connector, stereo plug, 3.5xL20.5 mm, brass, nickel plated, white, molding style

TENSILITY
20802 Sockeye Place #130
Bend, OR 97701 USA
tel **541.323.3228** *fax* **541.323.4202**
800 **877.670.7118** **www.tensility.com**

SIZE	PART NUMBER
A	**50-00402**

SCALE: 3:1	WEIGHT:	SHEET 1 OF 1

5 4 3 2 1