Chipsmall Limited consists of a professional team with an average of over 10 year of expertise in the distribution of electronic components. Based in Hongkong, we have already established firm and mutual-benefit business relationships with customers from,Europe,America and south Asia,supplying obsolete and hard-to-find components to meet their specific needs.

With the principle of “Quality Parts,Customers Priority,Honest Operation,and Considerate Service”,our business mainly focus on the distribution of electronic components. Line cards we deal with include Microchip,ALPS,ROHM,Xilinx,Pulse,ON,Everlight and Freescale. Main products comprise IC,Modules,Potentiometer,IC Socket,Relay,Connector.Our parts cover such applications as commercial,industrial, and automotives areas.

We are looking forward to setting up business relationship with you and hope to provide you with the best service and solution. Let us make a better world for our industry!

Contact us

Tel: +86-755-8981 8866 Fax: +86-755-8427 6832
Email & Skype: info@chipsmall.com Web: www.chipsmall.com
Address: A1208, Overseas Decoration Building, #122 Zhenhua RD., Futian, Shenzhen, China

THIS DRAWING IS UNPUBLISHED. RELEASED FOR PUBLICATION -,- .
© COPYRIGHT - By - ALL RIGHTS RESERVED.

LOC	DIST
G	14

REVISIONS

P	LTR	DESCRIPTION	DATE	DWN	APVD
	K5	REVISED PER ECO-11-004820	11MAR11	RK	HMR

AMP
WIRE RANGE

22-20 AWG
STRANDED

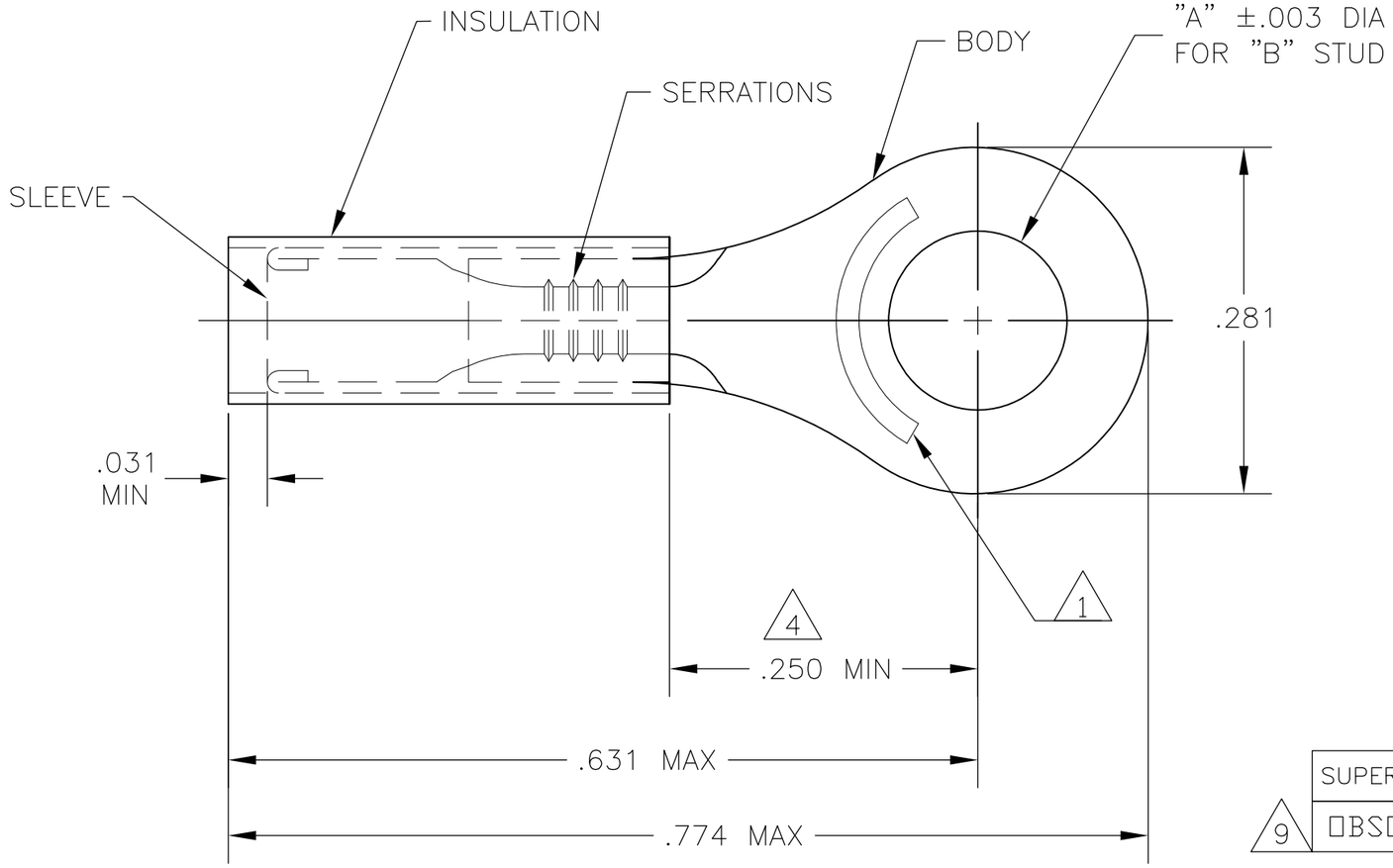

1. STAMP AMP 22-20 APPROX AS SHOWN
2. FOR .035 TO .100 WIRE INSULATION DIA
3. TONGUE MATERIAL THK .023±.002
4. DIMENSION APPLIES FROM EDGE OF METAL WIRE BARREL TO CENTER OF STUD HOLE.
5. BODY: MATERIAL - COPPER ASTM B152
   FINISH - OVER NICKEL PLATE
   (QQ-N-290) .0003 AVG EXT. THK.
6. SLEEVE: MATERIAL - COPPER ASTM B152
   FINISH - NICKEL PL. (QQ-N-290)
   .00003 AVG EXT. THK.
7. INSULATION:
   MATERIAL - TEFLON (ASTM D3295)
   COLOR: GREEN
8. REPLACED BY 50831
9. OBSOLETE PARTS: OBSOLETE CIS STREAMLINING PER D.RENAUD/D.SINISI

	"B"	"A"	QTY	PACKAGE TYPE	PART NO.
	#4	.119	100	SMALL PACK 50831	8-50831-1
SUPERSEDED	#6	.145	2500	50831-1 ON TAPE	50831-3
9 OBSOLETE	#4	.119	2500	50831 ON TAPE	50831-2 8
	#6	.145	1000	LOOSE PIECE	50831-1
	#4	.119	1000	LOOSE PIECE	50831

THIS DRAWING IS A CONTROLLED DOCUMENT.

DIMENSIONS: INCHES

TOLERANCES UNLESS OTHERWISE SPECIFIED:

0 PLC	± -
1 PLC	± -
2 PLC	± .02
3 PLC	± .008
4 PLC	± -
ANGLES	± 1°

MATERIAL 5 6 7
FINISH 5 6 7

DWN	JR RUTH	06AUG07
CHK	T MICHIELUTTI	06AUG07
APVD	T MICHIELUTTI	06AUG07
PRODUCT SPEC	—	
APPLICATION SPEC	—	
WEIGHT	—	

TE Connectivity

NAME: TERMINAL - TEFLON, PIDG, STRATO-THERM, RING TONGUE, -

SIZE	CAGE CODE	DRAWING NO	RESTRICTED TO
A3	00779	C-50831	—

CUSTOMER DRAWING | SCALE 8:1 | SHEET 1 OF 1 | REV K5

1470-19 (3/11)