Chipsmall Limited consists of a professional team with an average of over 10 year of expertise in the distribution of electronic components. Based in Hongkong, we have already established firm and mutual-benefit business relationships with customers from,Europe,America and south Asia,supplying obsolete and hard-to-find components to meet their specific needs.

With the principle of “Quality Parts,Customers Priority,Honest Operation,and Considerate Service”,our business mainly focus on the distribution of electronic components. Line cards we deal with include Microchip,ALPS,ROHM,Xilinx,Pulse,ON,Everlight and Freescale. Main products comprise IC,Modules,Potentiometer,IC Socket,Relay,Connector.Our parts cover such applications as commercial,industrial, and automotives areas.

We are looking forward to setting up business relationship with you and hope to provide you with the best service and solution. Let us make a better world for our industry!

Contact us

Tel: +86-755-8981 8866 Fax: +86-755-8427 6832
Email & Skype: info@chipsmall.com Web: www.chipsmall.com
Address: A1208, Overseas Decoration Building, #122 Zhenhua RD., Futian, Shenzhen, China

© COPYRIGHT 2009 BY INDUSTRIAL FIBER OPTICS, INC.
ALL RIGHTS RESERVED.

LIGHT PIPE
PREPARATION/INSTALLATION:

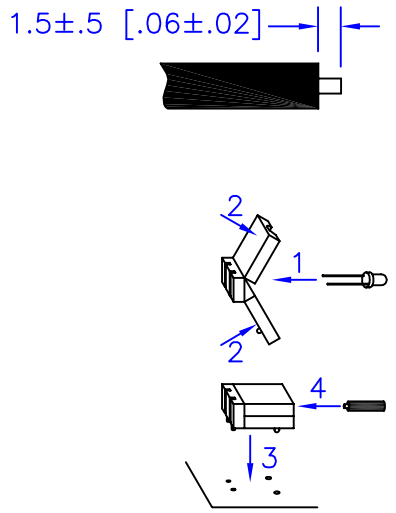

REVISIONS

REV	DESCRIPTION	ECO	DATE	DWN	APVD
C	REVISED STRIP LENGTH FROM 1.0±.05	0034	09/17/09	BB	KS

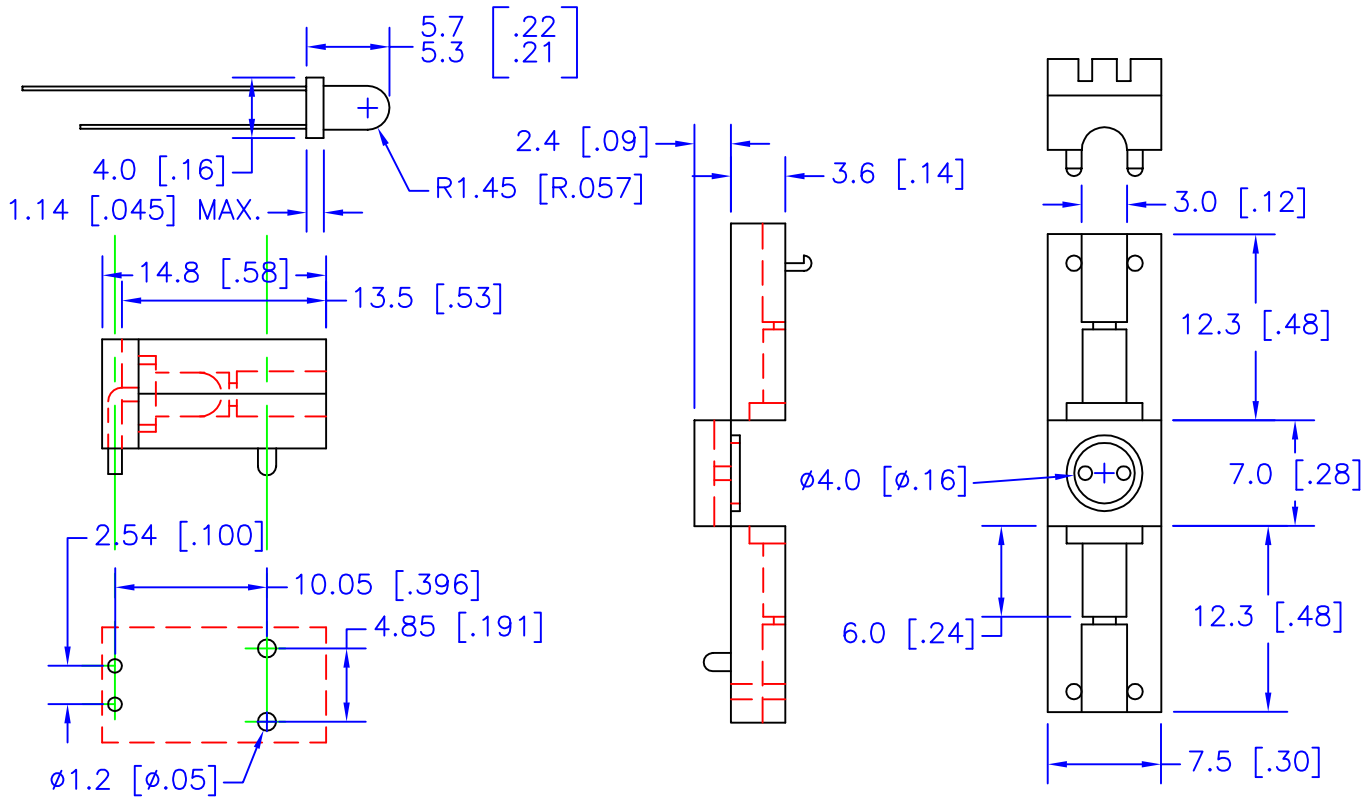

RECOMMENDED PWB
DEVICE LAYOUT

PART IS MADE OF BLACK NYLON.

NOTES:
1. ROHS COMPLIANT
2. UL 94V-2 FLAMMABILITY RATING
3. -40°C TO 85°C OPERATING TEMPERATURE
4. SUITABLE FOR LIGHT PIPE WITH ø3.0mm JACKET AND OPTICAL CORE NO GREATER THAN ø1.5mm
5. DO NOT WAVE SOLDER WITH THIS DEVICE
6. FOR BEST RESULTS USE ONLY NARROW VIEWING ANGLE NON-DIFFUSED LEDS WITH OUTPUT POWER GREATER THAN 100mcd
7. NOT RECOMMENDED FOR DATA COMMUNICATIONS

METRIC

UNLESS OTHERWISE SPECIFIED
DIMENSIONS MILLIMETERS [IN.]
TOLERANCES
0 PLC: ±1
1 PLC: ±.25
2 PLC: ±.127
3 PLC: ±.025
4 PLC: ±.013
ANGLE: ±1/2°
SURFACE TEXTURE: 3.2

REMOVE BURRS AND SHARP EDGES
FLATNESS .005 MM PER MM
ALL DIMENSIONS AFTER FINISH

PRODUCT	LIGHT PIPE
MATERIAL	NYLON 66
FINISH	NONE
DRAWN BY	B. BIDWELL
DATE	11/12/08
CHECKED BY	K. STOTZ
DATE	09/17/09

INDUSTRIAL FIBER OPTICS
TEMPE, AZ 85281

NAME
MOUNT, RIGHT-ANGLE
LED TO LIGHT PIPE

SIZE	SCALE	PART NUMBER	REV
A	2:1	51 0331	C

DO NOT SCALE DRAWING
SHEET 1 OF 1