Chipsmall Limited consists of a professional team with an average of over 10 year of expertise in the distribution of electronic components. Based in Hongkong, we have already established firm and mutual-benefit business relationships with customers from,Europe,America and south Asia,supplying obsolete and hard-to-find components to meet their specific needs.

With the principle of “Quality Parts,Customers Priority,Honest Operation,and Considerate Service”,our business mainly focus on the distribution of electronic components. Line cards we deal with include Microchip,ALPS,ROHM,Xilinx,Pulse,ON,Everlight and Freescale. Main products comprise IC,Modules,Potentiometer,IC Socket,Relay,Connector.Our parts cover such applications as commercial,industrial, and automotives areas.

We are looking forward to setting up business relationship with you and hope to provide you with the best service and solution. Let us make a better world for our industry!

Contact us

Tel: +86-755-8981 8866 Fax: +86-755-8427 6832
Email & Skype: info@chipsmall.com Web: www.chipsmall.com
Address: A1208, Overseas Decoration Building, #122 Zhenhua RD., Futian, Shenzhen, China

CASE FINISH	CURRENT (AMPS)	WORKING VOLTAGE -55°C TO +85°C AC	WORKING VOLTAGE -55°C TO +85°C DC	WORKING VOLTAGE -55°C TO +125°C AC	WORKING VOLTAGE -55°C TO +125°C DC	MAXIMUM DC RESISTANCE (OHMS)	MAXIMUM VOLTAGE DROP DC	MAXIMUM VOLTAGE DROP AC	MINIMUM CAPACITANCE (uF)
SOLDER	5	240@60Hz	450	240@60Hz	400	0.006	0.03	----	0.72

MIN. INSERTION LOSS PER MIL-STD-220 FULL LOAD, +25°C												
14 KHz	30 KHz	50 KHz	75 KHz	100 KHz	150 KHz	300 KHz	500 KHz	1 MHz	10 MHz	100 MHz	1 GHz	10 GHz
--	--	--	--	--	17	40	--	70	70	70	70	--

PART MARKING:

51-321-319
SCI DATE CODE

PACKAGE MARKING:

STANDARD

MARKING NOTES:

N/A

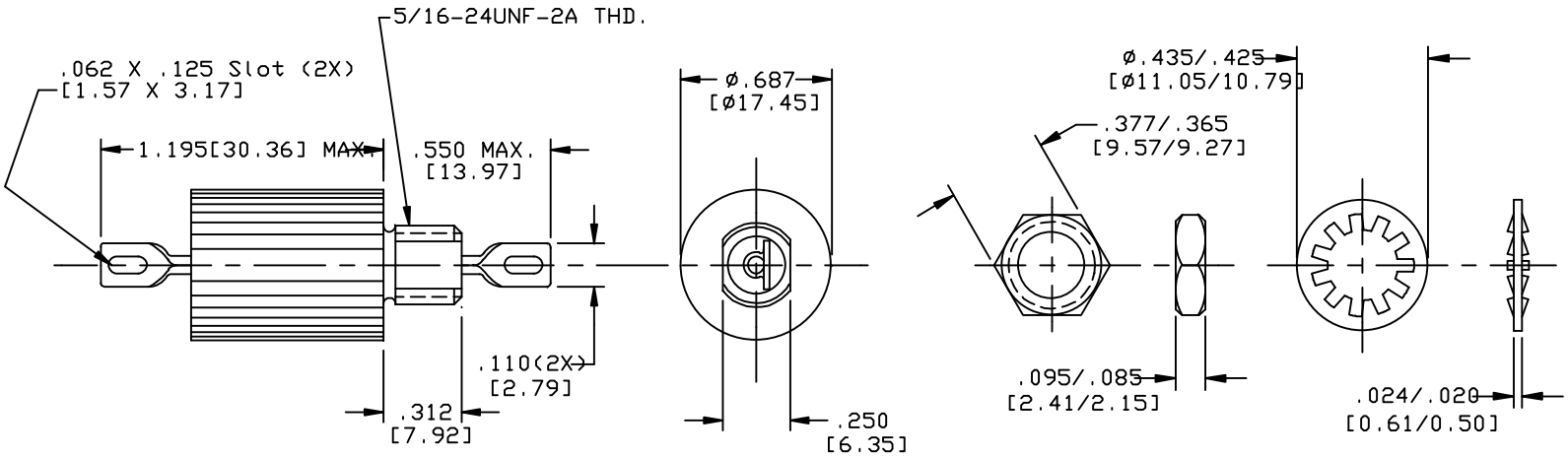

SCHEMATIC

MTG. HARDWARE

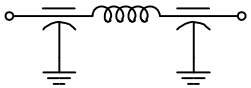

NOTES:

1) MOUNTING TORQUE NOT TO EXCEED 7in-lbs.

CN. 178447	37	REV. NO.	UNLESS OTHERWISE SPECIFIED DIMENSIONS ARE IN INCHES. [MILLIMETERS] DO NOT SCALE.	TOLERANCES UNLESS OTHERWISE SPECIFIED Fractions Dec. .xx± Dec. .xxx±010 Angles ±0° 30'	SPECTRUM CONTROL INC. ERIE, FAIRVIEW PENNSYLVANIA
		CHANGE NOTICE		CODE IDENT. NO. OLSP2	Dwn KAUFFMAN Ckd 2-17-97 Sheet 1 of 1
					Description Low Pass EMI Filter 51-321-319

Quality Products From The Specialists In Electro-Magnetic Compatibility