Chipsmall Limited consists of a professional team with an average of over 10 year of expertise in the distribution of electronic components. Based in Hongkong, we have already established firm and mutual-benefit business relationships with customers from,Europe,America and south Asia,supplying obsolete and hard-to-find components to meet their specific needs.

With the principle of “Quality Parts,Customers Priority,Honest Operation,and Considerate Service”,our business mainly focus on the distribution of electronic components. Line cards we deal with include Microchip,ALPS,ROHM,Xilinx,Pulse,ON,Everlight and Freescale. Main products comprise IC,Modules,Potentiometer,IC Socket,Relay,Connector.Our parts cover such applications as commercial,industrial, and automotives areas.

We are looking forward to setting up business relationship with you and hope to provide you with the best service and solution. Let us make a better world for our industry!

# Contact us

Tel: +86-755-8981 8866 Fax: +86-755-8427 6832
Email & Skype: info@chipsmall.com Web: www.chipsmall.com
Address: A1208, Overseas Decoration Building, #122 Zhenhua RD., Futian, Shenzhen, China

| CASE FINISH | CURRENT (AMPS) | WORKING VOLTAGE | | | | MAXIMUM DC RESISTANCE (OHMS) | MAXIMUM VOLTAGE DROP | | MINIMUM CAPACITANCE (uF) | MIN. INSERTION LOSS PER MIL-STD-220, FULL LOAD, +25°C | | | | | | | | | | | | |
|---|---|---|---|---|---|---|---|---|---|---|---|---|---|---|---|---|---|---|---|---|---|---|
| | | -55°C TO +85°C | | -55°C TO +125°C | | | | | | | | | | | | | | | | | | |
| | | AC | DC | AC | DC | | DC | AC | | 14 KHz | 30 KHz | 50 KHz | 75 KHz | 100 KHz | 150 KHz | 300 KHz | 500 KHz | 1 MHz | 10 MHz | 100 MHz | 1 GHz | 2 GHz |
| SOLDER | 3.0 | 125 | 150 | 125 | 150 | -- | .15 | --- | --- | -- | -- | -- | 8 | -- | 13 | 20 | -- | 35 | 70 | -- | 70 | -- |

PART MARKING:

API 51-353-113
DATE CODE
28

PACKAGE MARKING:

STANDARD

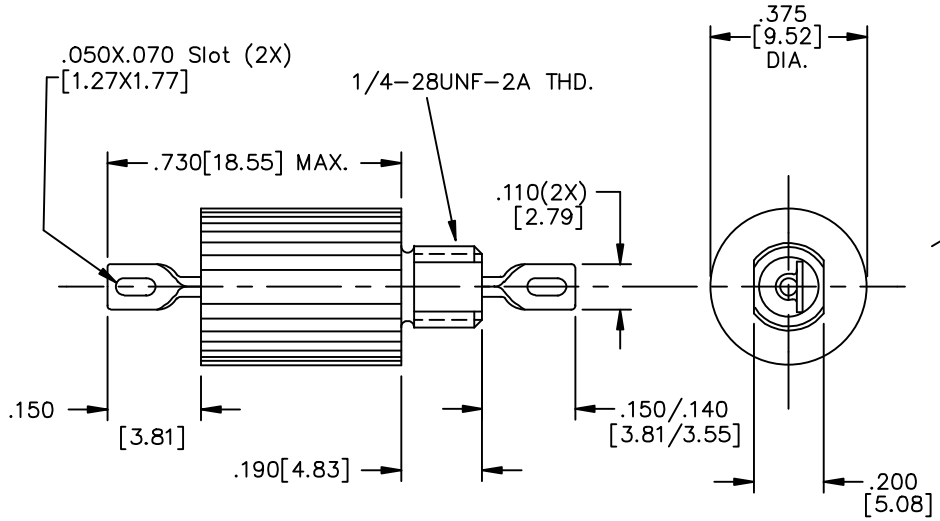


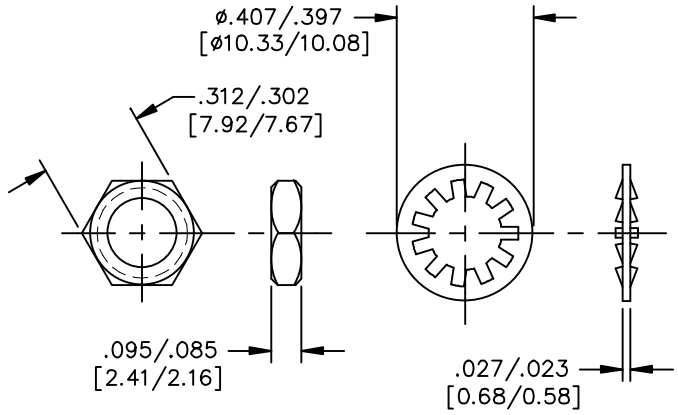


MTG. HARDWARE

MARKING NOTES:

N/A

SCHEMATIC

NOTES:

1) MOUNTING TORQUE NOT TO EXCEED 7in-lbs.

| REV. NO. | CHANGE NOTICE |
|---|---|
| 28 | CN #15924 |
| 27 | CN 183055 |

UNLESS OTHERWISE SPECIFIED DIMENSIONS ARE IN INCHES. [MILLIMETERS]

DO NOT SCALE.

TOLERANCES UNLESS OTHERWISE SPECIFIED
Fractions ±
Dec. .xx±
Dec. .xxx± .010
Angles ±0° 30'

CODE IDENT. NO. OLSP2

api technologies corp.

FAIRVIEW PENNSYLVANIA

Dwn. SLAGLE
Ckd. 9-30-15
Sheet 1 of 1

Description Low Pass EMI Filter

51-353-113

Quality Products From The Specialists In Electro-Magnetic Compatibility