Chipsmall Limited consists of a professional team with an average of over 10 year of expertise in the distribution of electronic components. Based in Hongkong, we have already established firm and mutual-benefit business relationships with customers from,Europe,America and south Asia,supplying obsolete and hard-to-find components to meet their specific needs.

With the principle of “Quality Parts,Customers Priority,Honest Operation,and Considerate Service”,our business mainly focus on the distribution of electronic components. Line cards we deal with include Microchip,ALPS,ROHM,Xilinx,Pulse,ON,Everlight and Freescale. Main products comprise IC,Modules,Potentiometer,IC Socket,Relay,Connector.Our parts cover such applications as commercial,industrial, and automotives areas.

We are looking forward to setting up business relationship with you and hope to provide you with the best service and solution. Let us make a better world for our industry!

Contact us

Tel: +86-755-8981 8866 Fax: +86-755-8427 6832
Email & Skype: info@chipsmall.com Web: www.chipsmall.com
Address: A1208, Overseas Decoration Building, #122 Zhenhua RD., Futian, Shenzhen, China

CASE FINISH	CURRENT (AMPS)	WORKING VOLTAGE				MAXIMUM DC RESISTANCE (OHMS)	MAXIMUM VOLTAGE DROP		MINIMUM CAPACITANCE (uF)	MIN. INSERTION LOSS PER MIL-STD-220, FULL LOAD, +25°C												
		-55°C TO +85°C		-55°C TO +125°C																		
		AC	DC	AC	DC		DC	AC		14 KHz	30 KHz	50 KHz	75 KHz	100 KHz	150 KHz	300 KHz	500 KHz	1 MHz	10 MHz	100 MHz	1 GHz	10 GHz
SOLDER	15	---	--	------	50	0.008	0.12	---	1.4uF	--	15	--	--	--	28	33	--	40	40	70	70	--

PART MARKING:

J M28861/01-011TB
L OLSP2 DATE CODE

PACKAGE MARKING:

J M28861/01-011TB
OLSP2 DATE CODE
50VDC 15AMP 51-359-086
QTY.

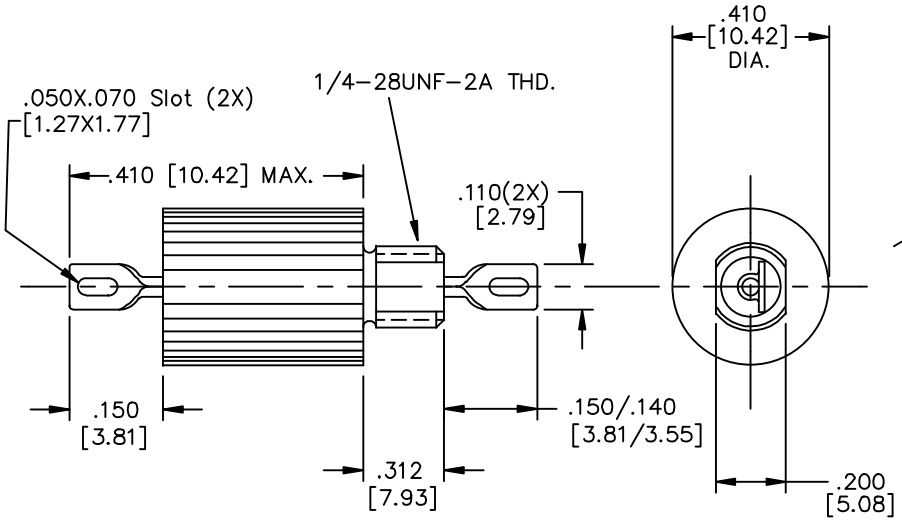

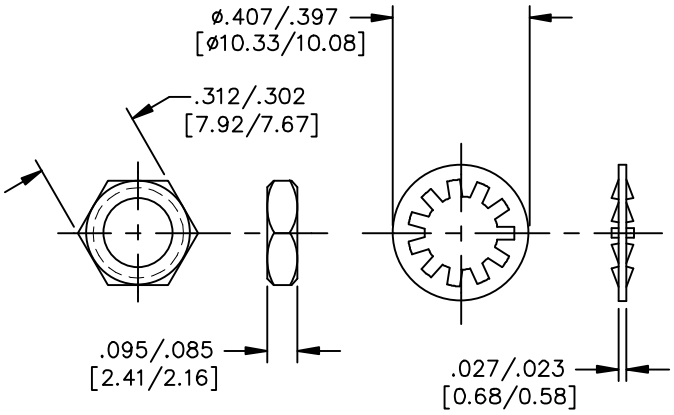

MTG. HARDWARE

MARKING NOTES:

N/A

SCHEMATIC

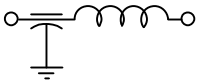

NOTES:

1. MOUNTING TORQUE NOT TO EXCEED 7in-lbs.
2. THIS PART CODED "NCA". API TECHNOLOGIES DOES NOT HAVE CHANGE AUTHORITY. CUSTOMER APPROVAL REQUIRED BEFORE PRODUCT/PROCESS CHANGES CAN BE MADE. (30)

REV. NO.	CHANGE NOTICE
30	CN 63743-ENG
29	CN 204680
28	CN 186058
27	CN. 176701
26	CN. 175582

UNLESS OTHERWISE SPECIFIED DIMENSIONS ARE IN INCHES. [MILLIMETERS]

DO NOT SCALE.

TOLERANCES UNLESS OTHERWISE SPECIFIED
Fractions ±
Dec. .xx±
Dec. .xxx± .010
Angles ±0° 30'

CODE IDENT. NO. OLSP2

api technologies corp.

FAIRVIEW PENNSYLVANIA

Dwn. KAUFFMAN
Date 5-15-12
Sheet 1 of 1

Description Low Pass EMI Filter

51-359-086

Quality Products From The Specialists In Electro-Magnetic Compatibility