Chipsmall Limited consists of a professional team with an average of over 10 year of expertise in the distribution of electronic components. Based in Hongkong, we have already established firm and mutual-benefit business relationships with customers from,Europe,America and south Asia,supplying obsolete and hard-to-find components to meet their specific needs.

With the principle of “Quality Parts,Customers Priority,Honest Operation,and Considerate Service”,our business mainly focus on the distribution of electronic components. Line cards we deal with include Microchip,ALPS,ROHM,Xilinx,Pulse,ON,Everlight and Freescale. Main products comprise IC,Modules,Potentiometer,IC Socket,Relay,Connector.Our parts cover such applications as commercial,industrial, and automotives areas.

We are looking forward to setting up business relationship with you and hope to provide you with the best service and solution. Let us make a better world for our industry!

Contact us

Tel: +86-755-8981 8866 Fax: +86-755-8427 6832
Email & Skype: info@chipsmall.com Web: www.chipsmall.com
Address: A1208, Overseas Decoration Building, #122 Zhenhua RD., Futian, Shenzhen, China

THIS DRAWING IS UNPUBLISHED. RELEASED FOR PUBLICATION -,- .
© COPYRIGHT - By - ALL RIGHTS RESERVED.

LOC	DIST
H	—

REVISIONS

P	LTR	DESCRIPTION	DATE	DWN	APVD
	G	REVISED PER ECO-12-012363	05JUN2012	SY	AC

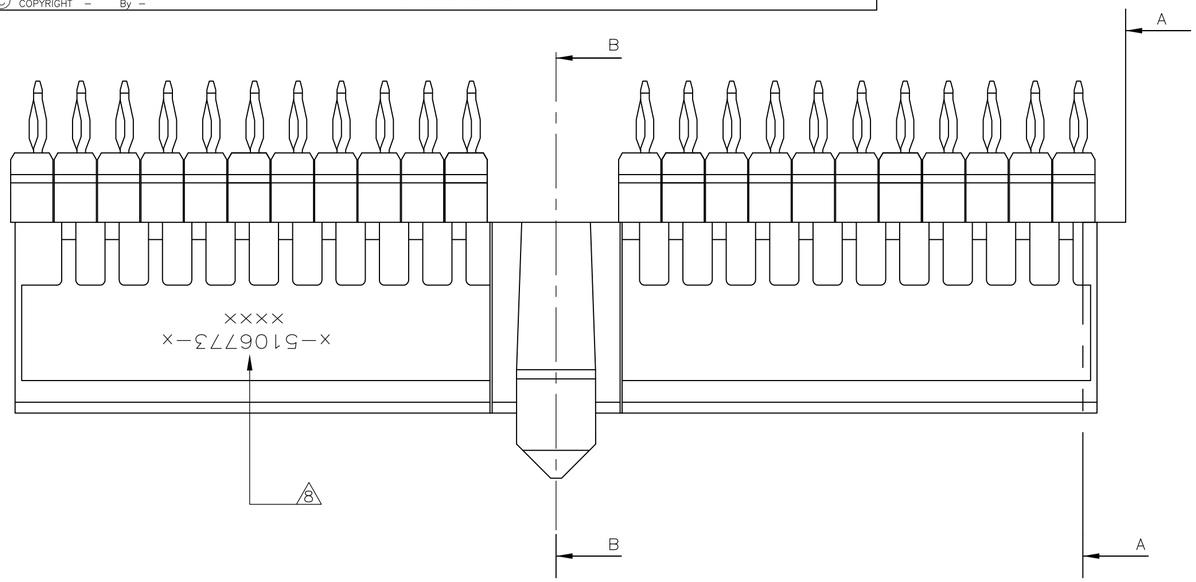

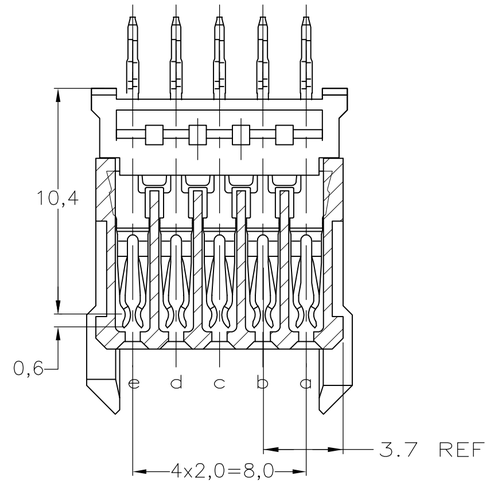

SECTION A-A

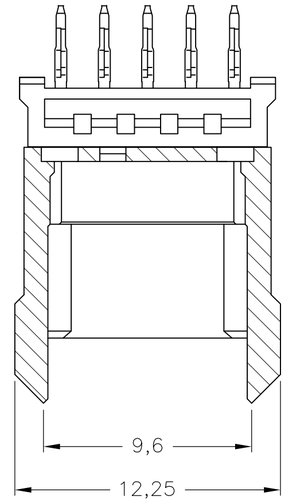

SECTION B-B

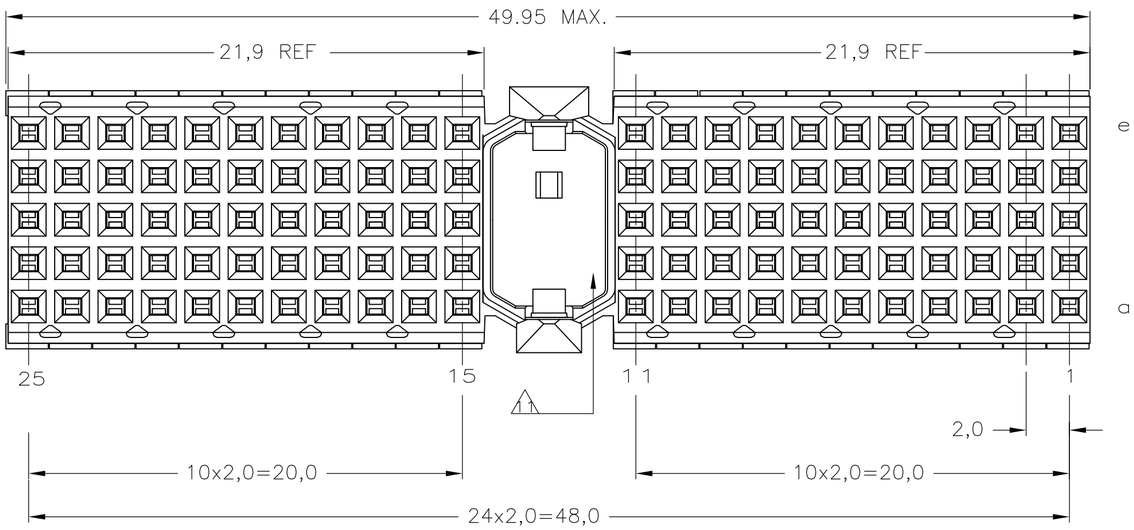

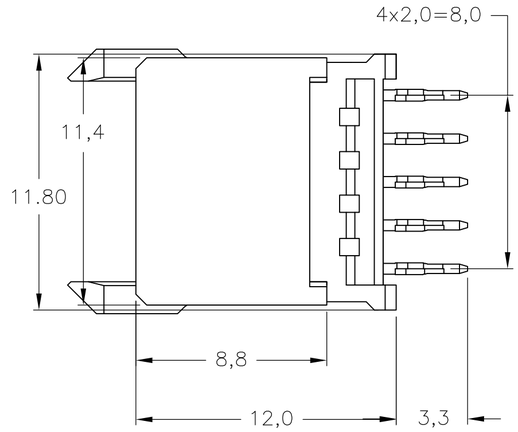

NOTES:

1. MATERIAL CONTACT: PHOSPHORBRONZE
   MATERIAL HOUSING: GLASSFILLED POLYESTER UL-RATING 94V0 (GRAY).
2. GENERAL PLATING SPECIFICATION: UNDERPLATING (ENTIRE CONTACT): 1,27µm NICKEL MIN. AND ACTION PIN: 0,5µm TIN MIN. FOR PLATING OF MATING SURFACES SEE APPLICABLE SPECIFICATION REFERENCE FOR EACH DASH NUMBER.
3. CONFORMS TO ALL TESTING ACCORDING IEC 61076-4-101 PERFORMANCE LEVEL 2.
4. CONFORMS TO ALL TESTING ACCORDING IEC 61076-4-101 PERFORMANCE LEVEL 1.
5. CONNECTOR TESTED AND QUALIFIED AGAINST TELCORDIA GR-1217-CORE QUALITY LEVEL III, CENTRAL OFFICE APPLICATIONS.
6. CONNECTOR TESTED AND QUALIFIED AGAINST TELCORDIA GR-1217-CORE QUALITY LEVEL III, UNCONTROLLED ENVIRONMENT APPLICATIONS.
7. CONNECTOR LUBRICATED WITH TELCORDIA GR-1217-CORE APPROVED LUBRICANT.
8. CONNECTOR PRINTED WITH PARTNUMBER AND DATECODE.
9. PLATED-THROUGH HOLES AT 2x2mm SQUARE GRID (110 HOLES).
10. HOLES IN ROW f AND z FOR POSSIBLE FUTURE USE OF GROUND RETURN SHIELD. (SHIELDS NOT YET TOOLED)
11. AREA RESERVED FOR KEYING PART (BASIC P.N.:100526).
12. 0.76µm MIN GOLD PLATING AT MATING SURFACE.

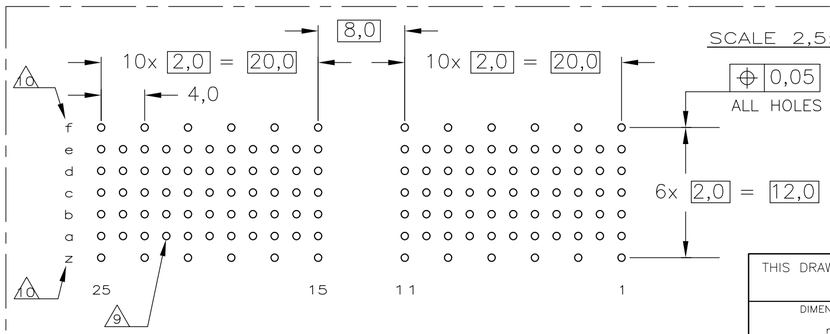

COMPONENT SIDE AS SHOWN
RECOMMENDED PCB-HOLE LAY-OUT

P.C.B. HOLE DIM. ACTION PIN
FOR DETAILS SEE
APPLICATION SPECIFICATION

FINISH	MATERIAL	PARTNUMBER
2 3 12	1	3-5106773-0
2 6 7	1	1-5106773-9
2 5 7	1	5106773-9
2 4	1	5106773-4
2 3	1	5106773-1

THIS DRAWING IS A CONTROLLED DOCUMENT.

DIMENSIONS: mm

TOLERANCES UNLESS OTHERWISE SPECIFIED:
0 PLC ± -
1 PLC ± -
2 PLC ± -
3 PLC ± -
4 PLC ± -
ANGLES ± -
±0.2

MATERIAL -
FINISH -

DWN	K.N.KIRAN	12AUG2004
CHK	B.MOOIJ	27OCT2004
APVD	B.MOOIJ	27OCT2004
PRODUCT SPEC	108-19082	
APPLICATION SPEC	114-19029	
WEIGHT	—	

TE Connectivity

NAME
Z-PACK 2mm HM TYPE A
110 POS. VERTICAL FEMALE
CONNECTOR ASSEMBLY

SIZE	CAGE CODE	DRAWING NO	RESTRICTED TO
A2	00779	C-5106773	—

CUSTOMER DRAWING | SCALE 5:1 | SHEET 1 OF 1 | REV G

5106773

1471-9 (3/11)