Chipsmall Limited consists of a professional team with an average of over 10 year of expertise in the distribution of electronic components. Based in Hongkong, we have already established firm and mutual-benefit business relationships with customers from,Europe,America and south Asia,supplying obsolete and hard-to-find components to meet their specific needs.

With the principle of “Quality Parts,Customers Priority,Honest Operation,and Considerate Service”,our business mainly focus on the distribution of electronic components. Line cards we deal with include Microchip,ALPS,ROHM,Xilinx,Pulse,ON,Everlight and Freescale. Main products comprise IC,Modules,Potentiometer,IC Socket,Relay,Connector.Our parts cover such applications as commercial,industrial, and automotives areas.

We are looking forward to setting up business relationship with you and hope to provide you with the best service and solution. Let us make a better world for our industry!

Contact us

Tel: +86-755-8981 8866 Fax: +86-755-8427 6832
Email & Skype: info@chipsmall.com Web: www.chipsmall.com
Address: A1208, Overseas Decoration Building, #122 Zhenhua RD., Futian, Shenzhen, China

THIS DRAWING IS UNPUBLISHED. RELEASED FOR PUBLICATION 20
© COPYRIGHT 20 BY TYCO ELECTRONICS CORPORATION. ALL RIGHTS RESERVED.

LOC	DIST
AD	00

REVISIONS

P	LTR	DESCRIPTION	DATE	DWN	APVD
	O	REV PER EC 0S12-0319-04	01JUN2005	BC	GS
	A	REV PER EC 0S12-0302-05	13DEC2005	BC	GS

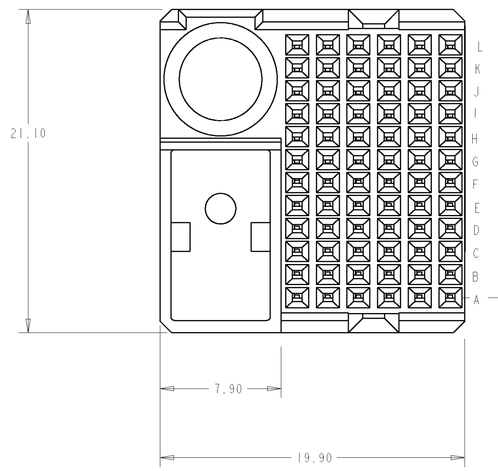

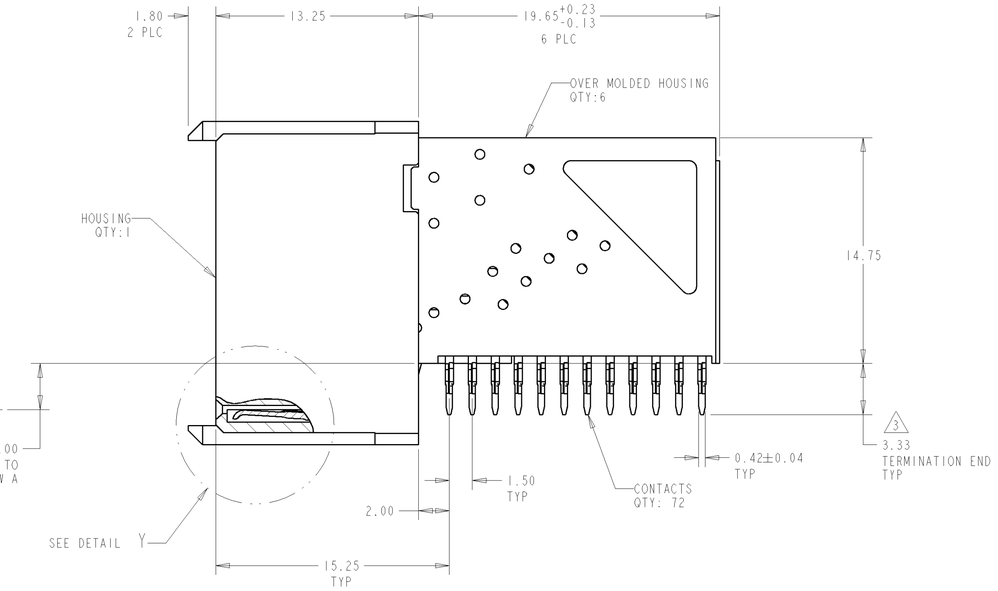

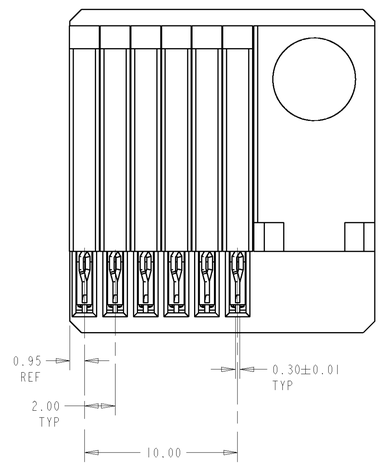

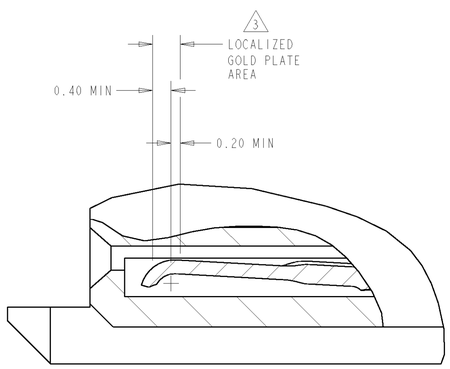

DETAIL Y
SCALE 15:1
TYPICAL

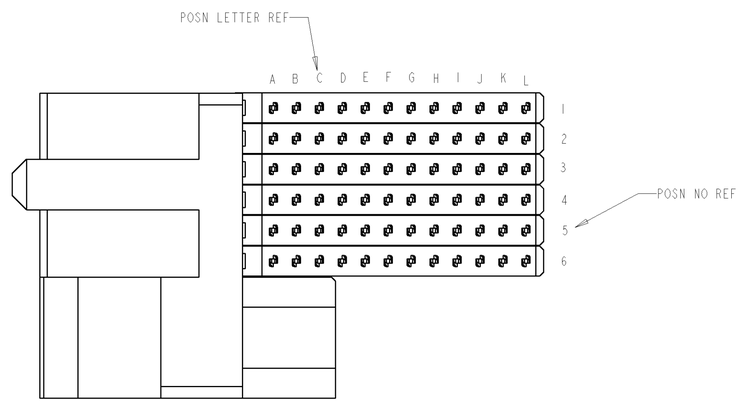

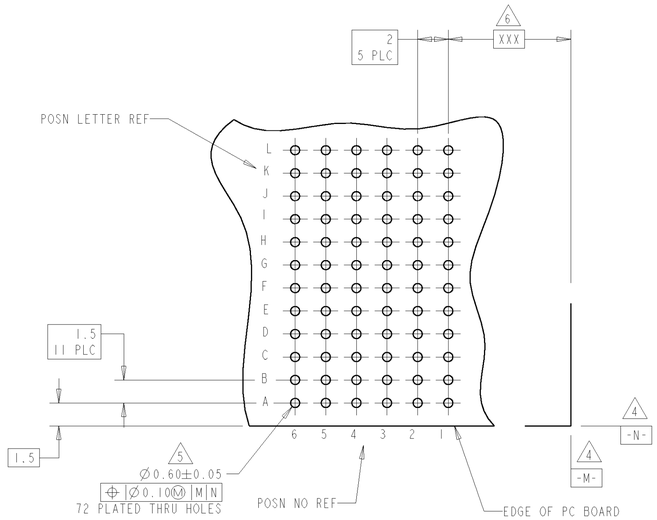

RECOMMENDED
PRINTED CIRCUIT BOARD
LAYOUT

RECOMMENDED PRINTED CIRCUIT BOARD
THICKNESS 1.27
COMPONENT SIDE OF PRINTED CIRCUIT BOARD

1. GLASS FILLED POLYESTER, BLACK
2. PHOSPHOR BRONZE
3. CONFORMS TO ALL TESTING ACCORDING TO IEC 61076-4-101 PERFORMANCE LEVEL 2.
4. DATUMS ESTABLISHED BY CUSTOMER.
5. DRILLED HOLE DIAMETER 0.700±0.025
   COPPER THK 0.025-0.05
   TIN THICKNESS 0.004-0.01
6. DIMENSION ESTABLISHED BY CUSTOMER.
7. GENERAL PLATING SPECIFICATION: UNDERPLATING (ENTIRE CONTACT): 1.27µm MIN NICKEL AND ACTION PIN: 0.5µm MIN TIN.
   FOR PLATING OF MATING SURFACES SEE APPLICABLE SPECIFICATION REFERENCE FOR EACH DASH NUMBER.

5120640-1
PART NUMBER

THIS DRAWING IS A CONTROLLED DOCUMENT FOR TYCO ELECTRONICS CORPORATION. IT IS SUBJECT TO CHANGE. ANY INFORMATION RECEIVED BY OTHER THAN THIS ORGANIZATION SHOULD BE CONTACTED FOR THE LATEST REVISION.

DWN	B CARBO	01JUN05
CHK	G SKIPPER	01JUN05
APVD	G SKIPPER	01JUN05

tyco Electronics
Tyco Electronics
Harrisburg, PA 17105-3608

DIMENSIONS: mm

TOLERANCES UNLESS OTHERWISE SPECIFIED:
0 PLC ±-
1 PLC ±-
2 PLC ±0.13
3 PLC ±-
4 PLC ±-
ANGLES ±-

MATERIAL
HOUSING: 1
CONTACTS: 2

FINISH
HOUSING: -
CONTACTS: 3 7

PRODUCT SPEC -
APPLICATION SPEC -
WEIGHT -

NAME
RECEPTACLE ASSEMBLY, SIGNAL/GROUND COMBINATION, 72 POSITION, LEFT HAND, Z-PACK 12 HM

SIZE	CAGE CODE	DRAWING NO	RESTRICTED TO
A1	00779	C-5120640	-

CUSTOMER DRAWING | SCALE 5:1 | SHEET 1 OF 1 | REV A