Chipsmall Limited consists of a professional team with an average of over 10 year of expertise in the distribution of electronic components. Based in Hongkong, we have already established firm and mutual-benefit business relationships with customers from,Europe,America and south Asia,supplying obsolete and hard-to-find components to meet their specific needs.

With the principle of “Quality Parts,Customers Priority,Honest Operation,and Considerate Service”,our business mainly focus on the distribution of electronic components. Line cards we deal with include Microchip,ALPS,ROHM,Xilinx,Pulse,ON,Everlight and Freescale. Main products comprise IC,Modules,Potentiometer,IC Socket,Relay,Connector.Our parts cover such applications as commercial,industrial, and automotives areas.

We are looking forward to setting up business relationship with you and hope to provide you with the best service and solution. Let us make a better world for our industry!

Contact us

Tel: +86-755-8981 8866 Fax: +86-755-8427 6832
Email & Skype: info@chipsmall.com Web: www.chipsmall.com
Address: A1208, Overseas Decoration Building, #122 Zhenhua RD., Futian, Shenzhen, China

REV.	ECN NO.	REVISIONS	DRN.	CKD.	APP.	DATE
A	——	NEW RELEASE	MC		MC	12-8-93
B	——	DELETED RIBS ON CENTER PEG & DECREASED DIA. TO Ø.068, AND Ø .140 WAS Ø .142.	MC		MC	1-6-94
C	——	PUT RIB DETAIL BACK ON CTR PEG.	MC		MC	1-13-94
D	——	ADDED +.005 -.007 TO DIM .125.	MC		MC	4-26-94
E	——	Ø.079 ±.002 WAS Ø.079 ±.001.	MC		MC	5-6-94

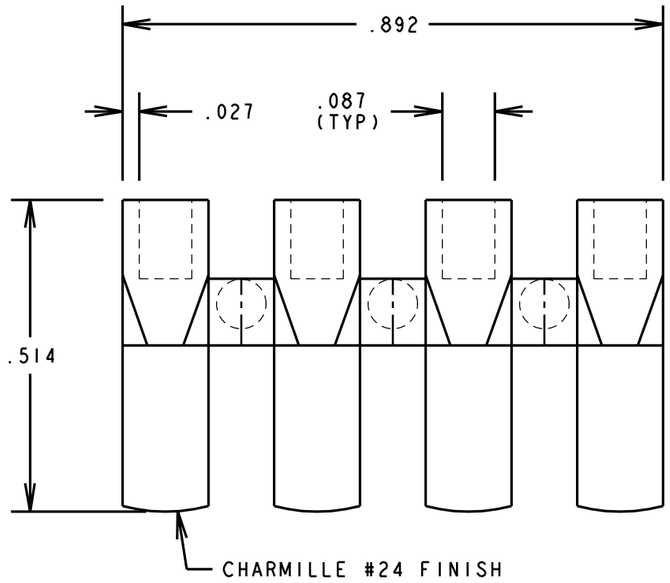

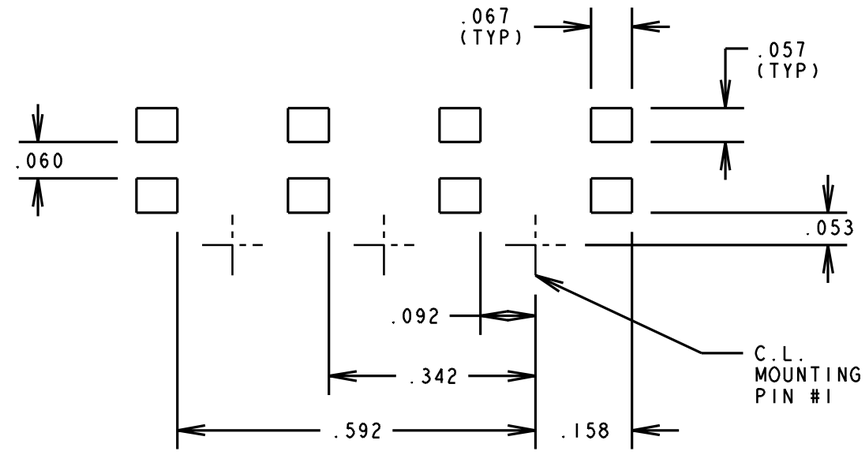

RECOMMENDED SOLDER PAD LAYOUT

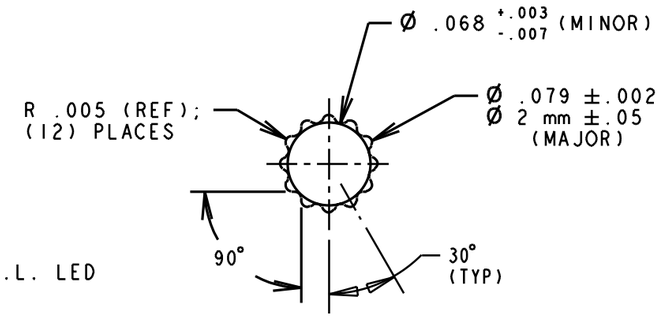

DETAIL "A"

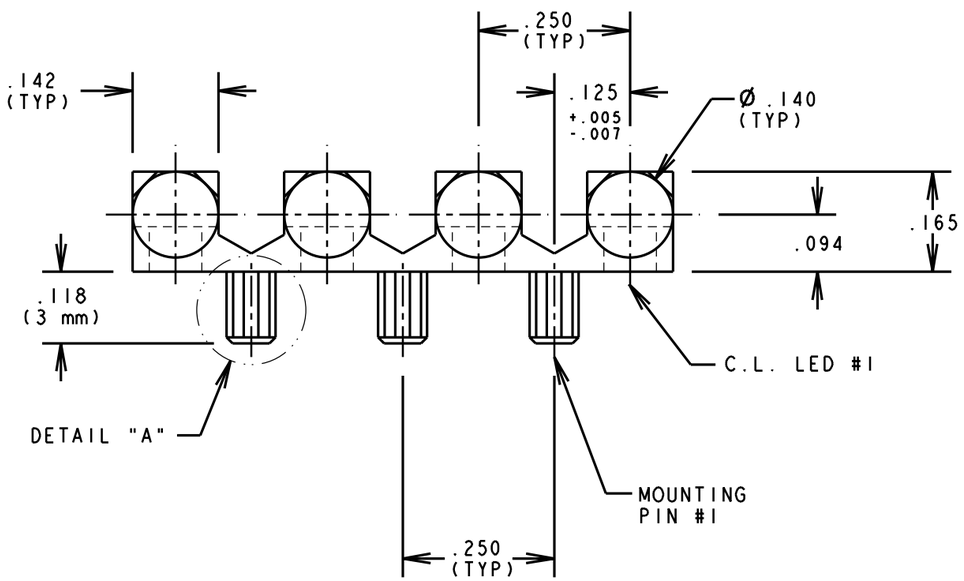

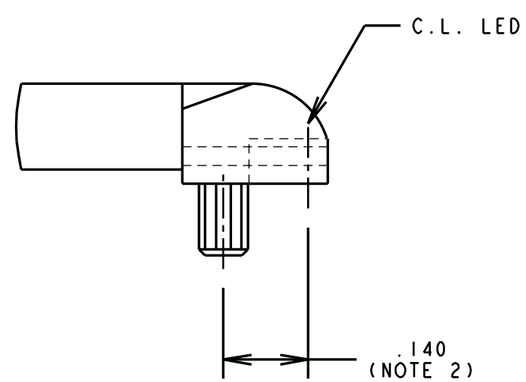

NOTES:

1. COMPONENT TO BE MOLDED IN A CLEAR TRANSMISSIVE POLYCARBONATE.
2. RECOMMENDED POSITION OF LED.
3. DIALIGHT PART NUMBER: 515-1020

THIS DRAWING AND THE CONTENTS HEREIN ARE CONFIDENTIAL AND THE SOLE PROPERTY OF DIALIGHT. REPRODUCTION OF THIS DRAWING OR CONSTRUCTION OF ANY PARTS WITHIN THIS DRAWING ARE FORBIDDEN WITHOUT THE WRITTEN CONSENT OF DIALIGHT.

SCALE 4:1

ALL DIM'S IN: INCHES

TOLERANCES:
UNLESS OTHERWISE SPECIFIED

FRACTIONS: ±1/64
DECIMALS (.XX): ±.01
DECIMALS (.XXX): ±.005

ANGLES: ±1°

FINISH:

FSCM 83330

DRAWING NUMBER: C-15829

REV: E

TITLE: LIGHTPIPE ARRAY

MATERIAL:

Dialight

1913 ATLANTIC AVE.
MANASQUAN, N.J. 08736

SHEET OF

FAMILY TABLE: