Chipsmall Limited consists of a professional team with an average of over 10 year of expertise in the distribution of electronic components. Based in Hongkong, we have already established firm and mutual-benefit business relationships with customers from,Europe,America and south Asia,supplying obsolete and hard-to-find components to meet their specific needs.

With the principle of “Quality Parts,Customers Priority,Honest Operation,and Considerate Service”,our business mainly focus on the distribution of electronic components. Line cards we deal with include Microchip,ALPS,ROHM,Xilinx,Pulse,ON,Everlight and Freescale. Main products comprise IC,Modules,Potentiometer,IC Socket,Relay,Connector.Our parts cover such applications as commercial,industrial, and automotives areas.

We are looking forward to setting up business relationship with you and hope to provide you with the best service and solution. Let us make a better world for our industry!

Contact us

Tel: +86-755-8981 8866 Fax: +86-755-8427 6832
Email & Skype: info@chipsmall.com Web: www.chipsmall.com
Address: A1208, Overseas Decoration Building, #122 Zhenhua RD., Futian, Shenzhen, China

DIMENSIONS mm (inches)

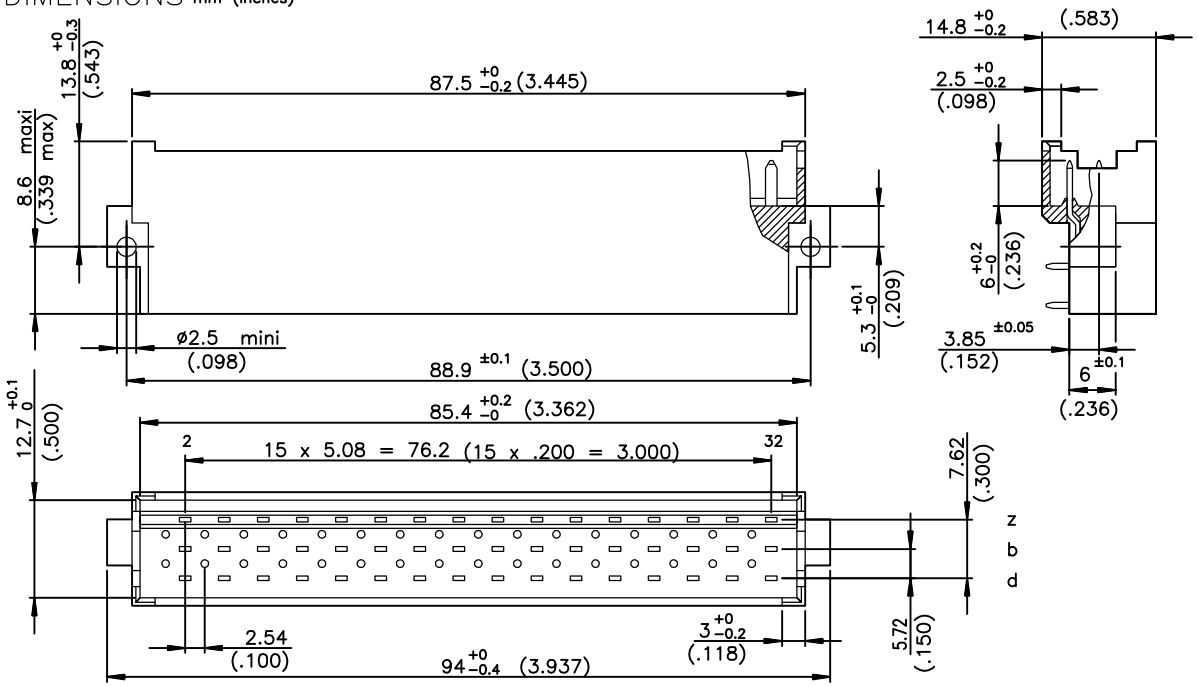

ELECTRICAL DATA

−Current at AMB.	5.5 A at 20° / 4 A at 70°
−Contact resistance	≤15mΩ according to DIN 41640 Teil 4 test 2a
−Insulation resistance	≥10^6 MΩ according to DIN 41640 teil 7 test 3a
−TEST VOLTAGE	according to DIN 41640 teil 21
contact/contact	1550V eff
contact/ground	2500V eff

MECHANICAL DATA

−Insertion force		≤75N
−Mechanical endurance	−class 1	500 matings unmatings according to DIN41640 teil 21
	−class 2	400 matings unmatings according to DIN41640 teil 21
−Material insulator		Polyester UL94V0
−Material contacts		Copper alloy
−Finishing contact surface		Gold over nickel Lead Free
−Finishing termination		Lead−Free
−Schock		≤30mΩ according to DIN 41640 Teil 14 test 6c
−Vibration	−class 1	10−2000Hz/20g according to DIN 41640 Teil 15
	−class 2	10−500Hz/5g according to DIN 41640 Teil 15

ENVIRONMENTAL DATA

−Climatic category	According to DIN 41612
−Corrosion	According to DIN 41612

P.C. CARD DRILLING (scale 1.2)

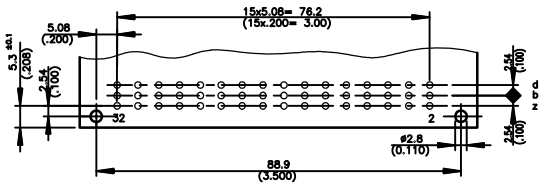

TERMINATION

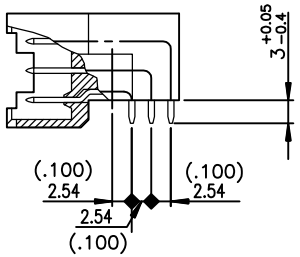

PART NUMBER	5159009	6	4	LF
NUMBER OF CONTACTS 32 or 48				
TERMINATION: Angled spills		5		
TERMINATION: Right angled press−fit		6		
PERFORMANCE CLASS: DIN 41612 class 2			5	
PERFORMANCE CLASS: DIN 41612 class 1			6	
CONTACT ARRANGEMENT: Row z,b and d with contacts (48)				111
CONTACT ARRANGEMENT: Row z and d with contacts (32)				101
CONTACT ARRANGEMENT: Row z and b with contacts (32)				110
LEAD−FREE				

NOTE RoHS INFORMATION

- The "LF" products meet European Union Directives and other country regulations as described in GS−22−008.
- The housing will whistand exposure to 260°C peak temperature for 3.5 seconds in a wave solder application with a 1.6mm minimum thick circuit board.
- For the right angled versions , like the current leaded versions, it's recommended to use high temperature adhesive or metallic device, to protect the nearlest plastic part in contact with of the solder wave, to avoid any visual plastic deterioration.

rev	ecn no	dr	date
C	LS05−0119	ETI	2005/12/13
D	LS06−0022	LGO	2006/02/21
E	LS06−0095	LGO	2006/06/26
F	LS07−0288	LGO	2007/11/19
G	F10−0214	APA	2010/10/01
H	F12−0053	APA	2012/05/07
−	−	−	−

European Views

www.fciconnect.com

surface ISO 1302 ✓ | tolerance std ISO 406 ISO 1101 | projection | mm

TOLERANCES UNLESS OTHERWISE SPECIFIED

Dr	PESSON	2006/02/21	ANGULAR	LINEAR	0.X	±0.1
Eng	PESSON	2006/02/21			0.XX	±0.1
Chr	LEGARE	2006/02/21	0.XX° ±2°		0.XXX	±0.1
Appr	LEGARE	2006/02/21	Product family		DIN POWER	

size A3 | Scale 1.5 | ECN F12−0053 | Spec ref −

title: PLUGS MEDIUM POWER
3 ROW STYLE F

dwg no C01−5159−0037 | Rev. H

catalog no − | CUSTOMER | sheet 1 of 1

REV F − 2006−04−17

Copyright FCI.

PDM: Rev:H STATUS: Released Printed: May 24, 2012