Chipsmall Limited consists of a professional team with an average of over 10 year of expertise in the distribution of electronic components. Based in Hongkong, we have already established firm and mutual-benefit business relationships with customers from,Europe,America and south Asia,supplying obsolete and hard-to-find components to meet their specific needs.

With the principle of “Quality Parts,Customers Priority,Honest Operation,and Considerate Service”,our business mainly focus on the distribution of electronic components. Line cards we deal with include Microchip,ALPS,ROHM,Xilinx,Pulse,ON,Everlight and Freescale. Main products comprise IC,Modules,Potentiometer,IC Socket,Relay,Connector.Our parts cover such applications as commercial,industrial, and automotives areas.

We are looking forward to setting up business relationship with you and hope to provide you with the best service and solution. Let us make a better world for our industry!

Contact us

Tel: +86-755-8981 8866 Fax: +86-755-8427 6832
Email & Skype: info@chipsmall.com Web: www.chipsmall.com
Address: A1208, Overseas Decoration Building, #122 Zhenhua RD., Futian, Shenzhen, China

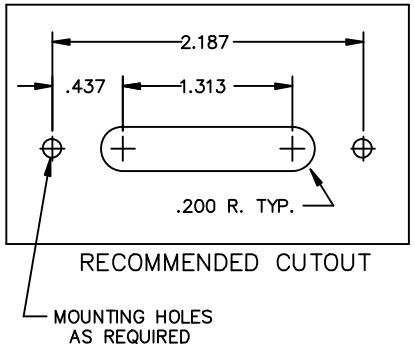

RECOMMENDED CUTOUT

NOTES:

1) VOLTAGE: 100 VDC.
2) CURRENT: 20 AMPS.
3) OPERATING TEMPERATURE: −55°C TO +105°C.
4) MATERIAL: BLACK THERMOPLASTIC OR EQUIV.
5) SCREW TYPE: #6−32 PHILSLOT HD. (21)
6) MARKING: 4 PT. CHARACTERS, WHITE INK.
7) CAPACITANCE: 2500pF MIN./ 5200pF MAX.
8) GROUND PLANE IS TO BE FLAT WITHIN .012".
9) SHIPPING TRAY LABEL MARKING:
   SCI 52−160−004−A DATE CODE
   100V, 20A, 12−22AWG
   UL & CSA LOGOS

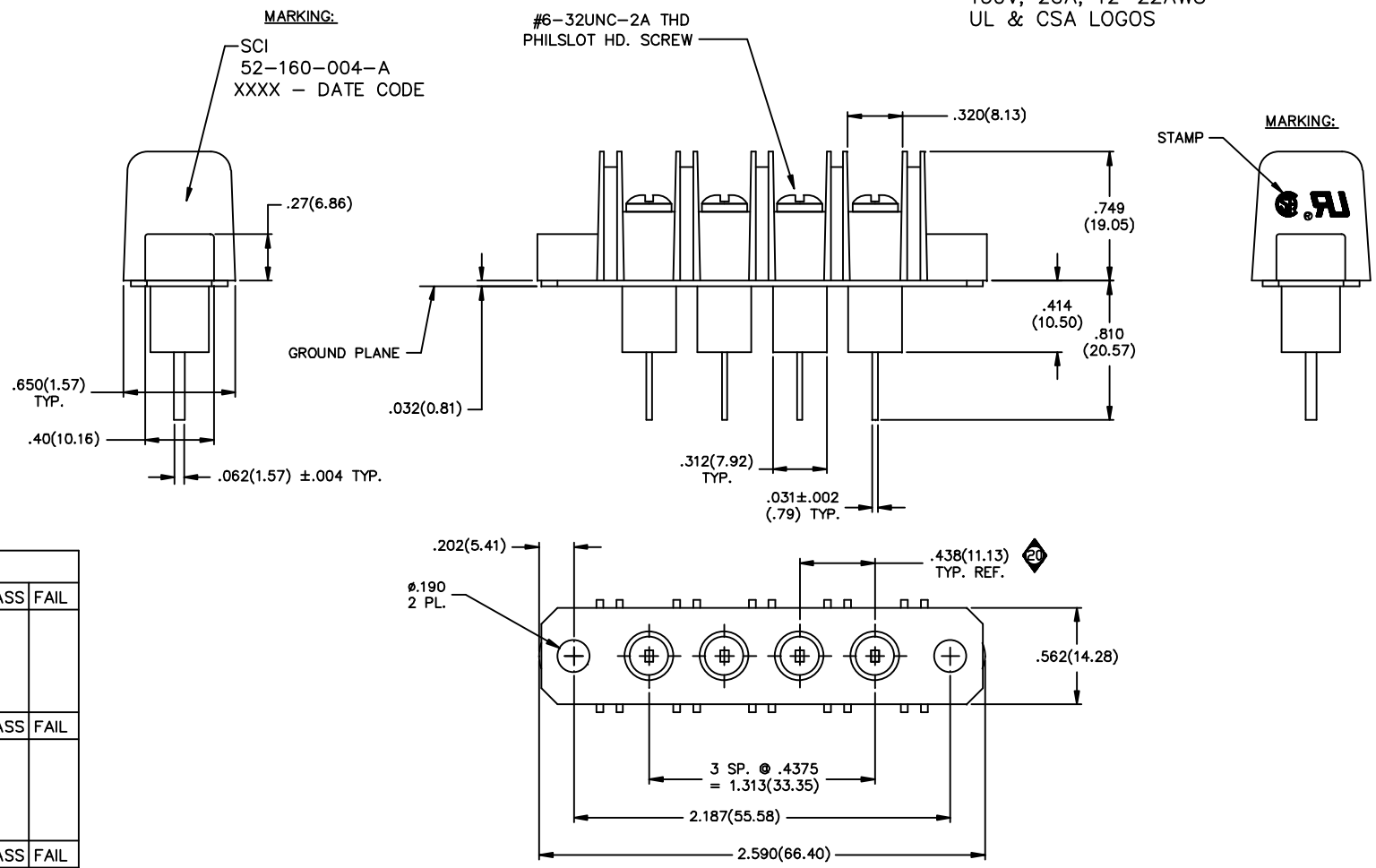

TEST SEQUENCE				
STEP 0400	94−4033−00	VISUAL/MECH.	PASS	FAIL
PER IT 38−0468 INSPECT DIMENSIONS AND WORKMANSHIP. PER MIL−STD−105, LEVEL II, 1%AQL COMMENTS: 100%		OPER:		
STEP 0100	94−1002−00	CAP./D.F.	PASS	FAIL
PER IT 38−0245 CAP: 2500pF TO 5200pF DF. ≤4% MAX COMMENTS: 100%		OPER:		
STEP 0200	94−2005−00	DWV	PASS	FAIL
PER IT 38−0245 DWV: 2000 VDC 25°C 1 MINUTE MINIMUM COMMENTS: 100%		OPER:		
STEP 0300	94−2015−00	I.R.	PASS	FAIL
PER IT 38−0245 IR: 100VDC, 1000 Mohms MIN. 2 MINUTES MAX. COMMENTS: 100%		OPER:		

REV. NO.	CHANGE NOTICE	REDRAWN
21	CN 46307−ENG	
20	CN 41934−ENG	
19	CN 29591−CPD	
18	CN 201633	
17	CN 199163	

UNLESS OTHERWISE SPECIFIED DIMENSIONS ARE IN INCHES. (MILLIMETERS) DO NOT SCALE.

THIRD ANGLE PROJECTION

TOLERANCES UNLESS OTHERWISE SPECIFIED
Fractions ± 1/64
Dec. .xx± .03
Dec. .xxx±.020
Angles ±0° 30′

CODE IDENT. NO. DLSP2

SPECTRUM CONTROL INC.

FAIRVIEW PENNSYLVANIA

Dwn. KAUFFMAN
Date 2−9−09
Engr. GRUNAUER
Sheet 1 of 1

Description: FILTER TERMINAL BLOCK

52−160−004−A

Quality Products From The Specialists In Electro−Magnetic Compatibility