Chipsmall Limited consists of a professional team with an average of over 10 year of expertise in the distribution of electronic components. Based in Hongkong, we have already established firm and mutual-benefit business relationships with customers from,Europe,America and south Asia,supplying obsolete and hard-to-find components to meet their specific needs.

With the principle of “Quality Parts,Customers Priority,Honest Operation,and Considerate Service”,our business mainly focus on the distribution of electronic components. Line cards we deal with include Microchip,ALPS,ROHM,Xilinx,Pulse,ON,Everlight and Freescale. Main products comprise IC,Modules,Potentiometer,IC Socket,Relay,Connector.Our parts cover such applications as commercial,industrial, and automotives areas.

We are looking forward to setting up business relationship with you and hope to provide you with the best service and solution. Let us make a better world for our industry!

Contact us

Tel: +86-755-8981 8866 Fax: +86-755-8427 6832
Email & Skype: info@chipsmall.com Web: www.chipsmall.com
Address: A1208, Overseas Decoration Building, #122 Zhenhua RD., Futian, Shenzhen, China

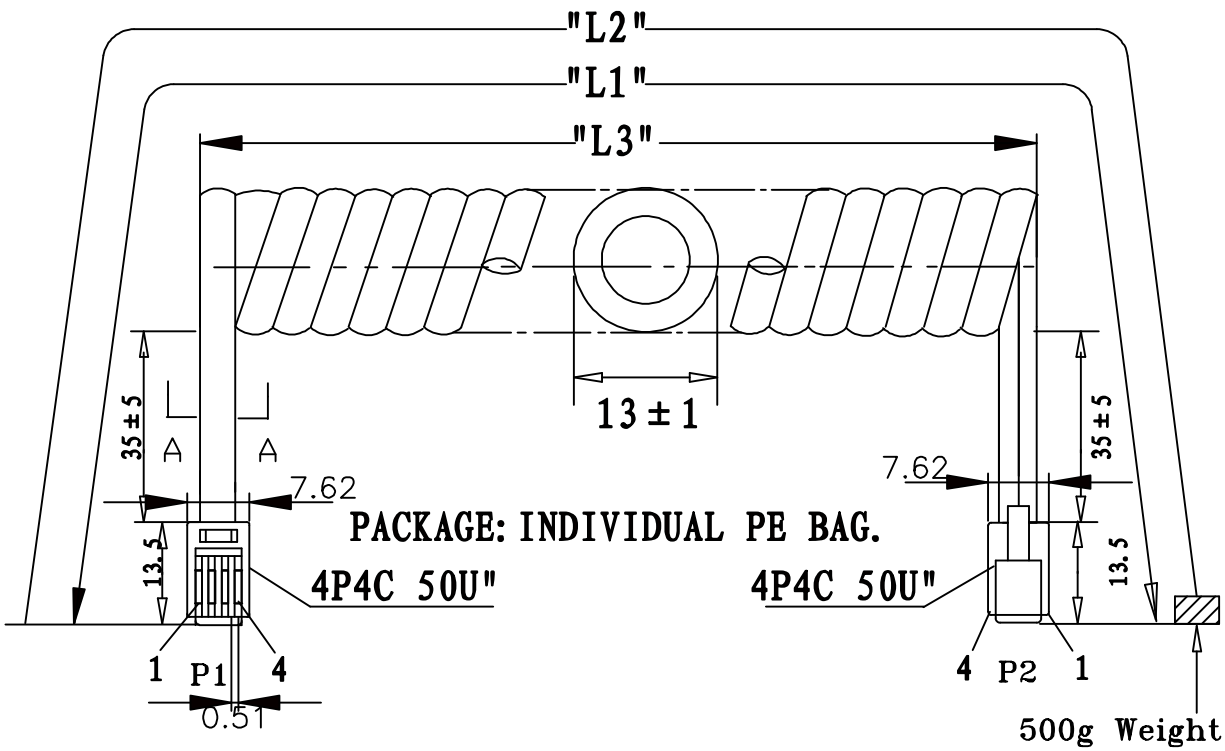

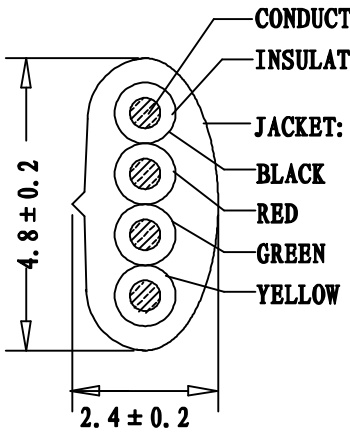

SEC:A-A

NOTE FOR PLUG:
MATERIAL: HOUSING-POLYCARBONATE, CLEAR.
TERMINAL-0.36[.014] THICK PHOSPHOR BRONZE.
THICK GOLD IN LOCALIZED GOLD PLATE.
AREA, GOLD FLASH OVER THE REMAINDER.
OVER 2.54um[.000100] THICK NICKEL
UNDERPLATE.

TERMINATION:

P1	P2	COLOR
1	4	BLACK
2	3	RED
3	2	GREEN
4	1	YELLOW

PART NO	DRAWING NO	BUYER COLOR	VENDOR COLOR	RETRACTED LENGTH ("L3")	CUSTOMER Accepted ("L2")	CUT LENGTH "L1"
520-26-4400-WH-0005F	A	White	W-103 LIGHT	330 ± 30	5.0FT-5.75FT	2300-2400
520-26-4400-WH-0007F	B	White	W-103 LIGHT	470 ± 30	7.0FT-8.05FT	3000-3200
520-26-4400-WH-0010F	C	White	W-103 LIGHT	630 ± 50	10.0FT-11.5FT	4300-4500
520-26-4400-WH-0012F	D	White	W-103 LIGHT	800 ± 50	12.0FT-13.8FT	5200-5400
520-26-4400-WH-0014F	E	White	W-103 LIGHT	850 ± 50	14.0FT-16.1FT	5800-6000
520-26-4400-WH-0025F	F	White	W-103 LIGHT	1900 ± 50	25.0FT-28.75FT	10800-11000

REVISE	VERSION	BASIS	CONTENTS
12-02-17	A/0	T0210A	NEW DRAWING

CnC Tech, LLC
Industrial Cable and Connector Technology

IDRAWING NO: 671-300		CUSTOMER: L-671
ITEM NO: 4C COILD CORD P+P PLUG		UNIT: mm
DATE: 2012-02-17		ISSUE: (A/0)
DRAWN:	QE:	QA:
SALES DEPT:	SALES MANAGER:	