Chipsmall Limited consists of a professional team with an average of over 10 year of expertise in the distribution of electronic components. Based in Hongkong, we have already established firm and mutual-benefit business relationships with customers from,Europe,America and south Asia,supplying obsolete and hard-to-find components to meet their specific needs.

With the principle of “Quality Parts,Customers Priority,Honest Operation,and Considerate Service”,our business mainly focus on the distribution of electronic components. Line cards we deal with include Microchip,ALPS,ROHM,Xilinx,Pulse,ON,Everlight and Freescale. Main products comprise IC,Modules,Potentiometer,IC Socket,Relay,Connector.Our parts cover such applications as commercial,industrial, and automotives areas.

We are looking forward to setting up business relationship with you and hope to provide you with the best service and solution. Let us make a better world for our industry!

Contact us

Tel: +86-755-8981 8866 Fax: +86-755-8427 6832
Email & Skype: info@chipsmall.com Web: www.chipsmall.com
Address: A1208, Overseas Decoration Building, #122 Zhenhua RD., Futian, Shenzhen, China

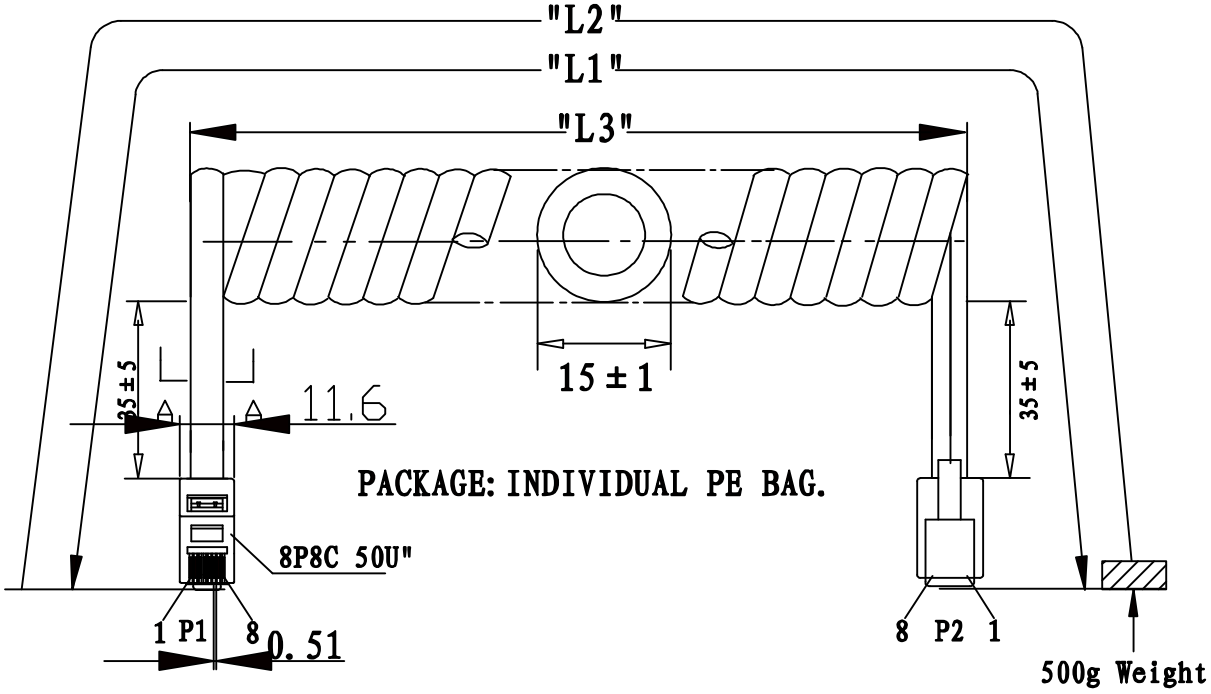

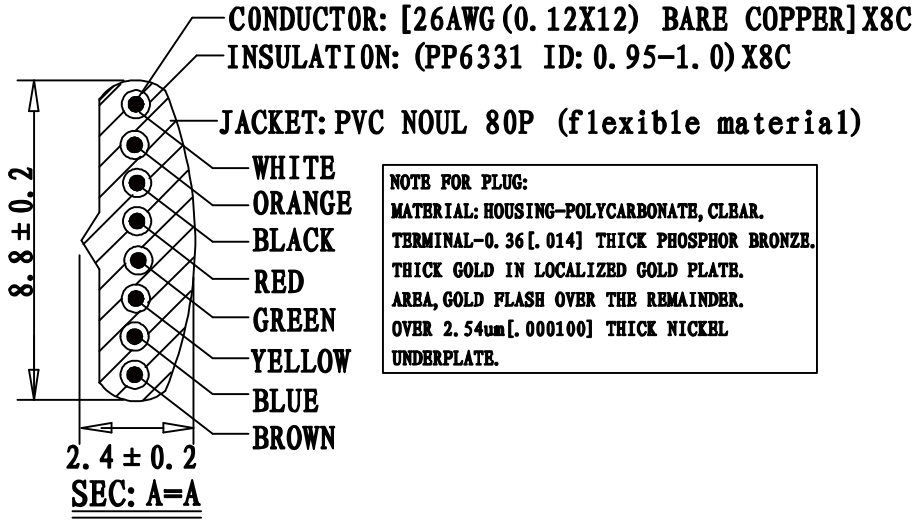

NOTE FOR PLUG:
MATERIAL: HOUSING-POLYCARBONATE, CLEAR.
TERMINAL-0.36[.014] THICK PHOSPHOR BRONZE.
THICK GOLD IN LOCALIZED GOLD PLATE.
AREA, GOLD FLASH OVER THE REMAINDER.
OVER 2.54um[.000100] THICK NICKEL
UNDERPLATE.

P1		P2
1	WHITE	8
2	ORANGE	7
3	BLACK	6
4	RED	5
5	GREEN	4
6	YELLOW	3
7	BLUE	2
8	BROWN	1

PART NO	DRAWING NO	BUYER COLOR	VENDOR COLOR	RETRACTED LENGTH ("L3")	CUSTOMER Accepted ("L2")	CUT LENGTH "L1
520-26-8800-SV-0005F	A	Silver	S49-1 LIGHT	700 ± 50	5.0FT-5.75FT	2900-3000
520-26-8800-SV-0007F	B	Silver	S49-1 LIGHT	1000 ± 50	7.0FT-8.05FT	4000-4200
520-26-8800-SV-0010F	C	Silver	S49-1 LIGHT	1500 ± 50	10.0FT-11.5FT	5900-6100
520-26-8800-SV-0012F	D	Silver	S49-1 LIGHT	1650 ± 50	12.0FT-13.8FT	7000-7200
520-26-8800-SV-0014F	E	Silver	S49-1 LIGHT	1900 ± 50	14.0FT-16.1FT	7600-7800
520-26-8800-SV-0025F	F	Silver	S49-1 LIGHT	3200 ± 50	25.0FT-28.75FT	14300-14500

REVISE	VERSION	BASIS	CONTENTS
12-02-20	A/0	T0210A	NEW DRAWING

CnC Tech, LLC
Industrial Cable and Connector Technology

IDRAWING NO: 671-307		CUSTOMER: L-671
ITEM NO: 8C COILD CORD P+P PLUG		UNIT: mm
DATE: 2012-02-20		ISSUE: (A/0)
DRAWN:	QE:	QA:
SALES DEPT:	SALES MANAGER:	