Chipsmall Limited consists of a professional team with an average of over 10 year of expertise in the distribution of electronic components. Based in Hongkong, we have already established firm and mutual-benefit business relationships with customers from,Europe,America and south Asia,supplying obsolete and hard-to-find components to meet their specific needs.

With the principle of “Quality Parts,Customers Priority,Honest Operation,and Considerate Service”,our business mainly focus on the distribution of electronic components. Line cards we deal with include Microchip,ALPS,ROHM,Xilinx,Pulse,ON,Everlight and Freescale. Main products comprise IC,Modules,Potentiometer,IC Socket,Relay,Connector.Our parts cover such applications as commercial,industrial, and automotives areas.

We are looking forward to setting up business relationship with you and hope to provide you with the best service and solution. Let us make a better world for our industry!

Contact us

Tel: +86-755-8981 8866 Fax: +86-755-8427 6832
Email & Skype: info@chipsmall.com Web: www.chipsmall.com
Address: A1208, Overseas Decoration Building, #122 Zhenhua RD., Futian, Shenzhen, China

THIS DRAWING IS UNPUBLISHED. RELEASED FOR PUBLICATION -,- .
© COPYRIGHT - BY TYCO ELECTRONICS CORPORATION. ALL RIGHTS RESERVED.

LOC	DIST
AF	50

REVISIONS

P	LTR	DESCRIPTION	DATE	DWN	APVD
	F1	REVISED PER ECR-10-005376	11MAR10	JR	GP

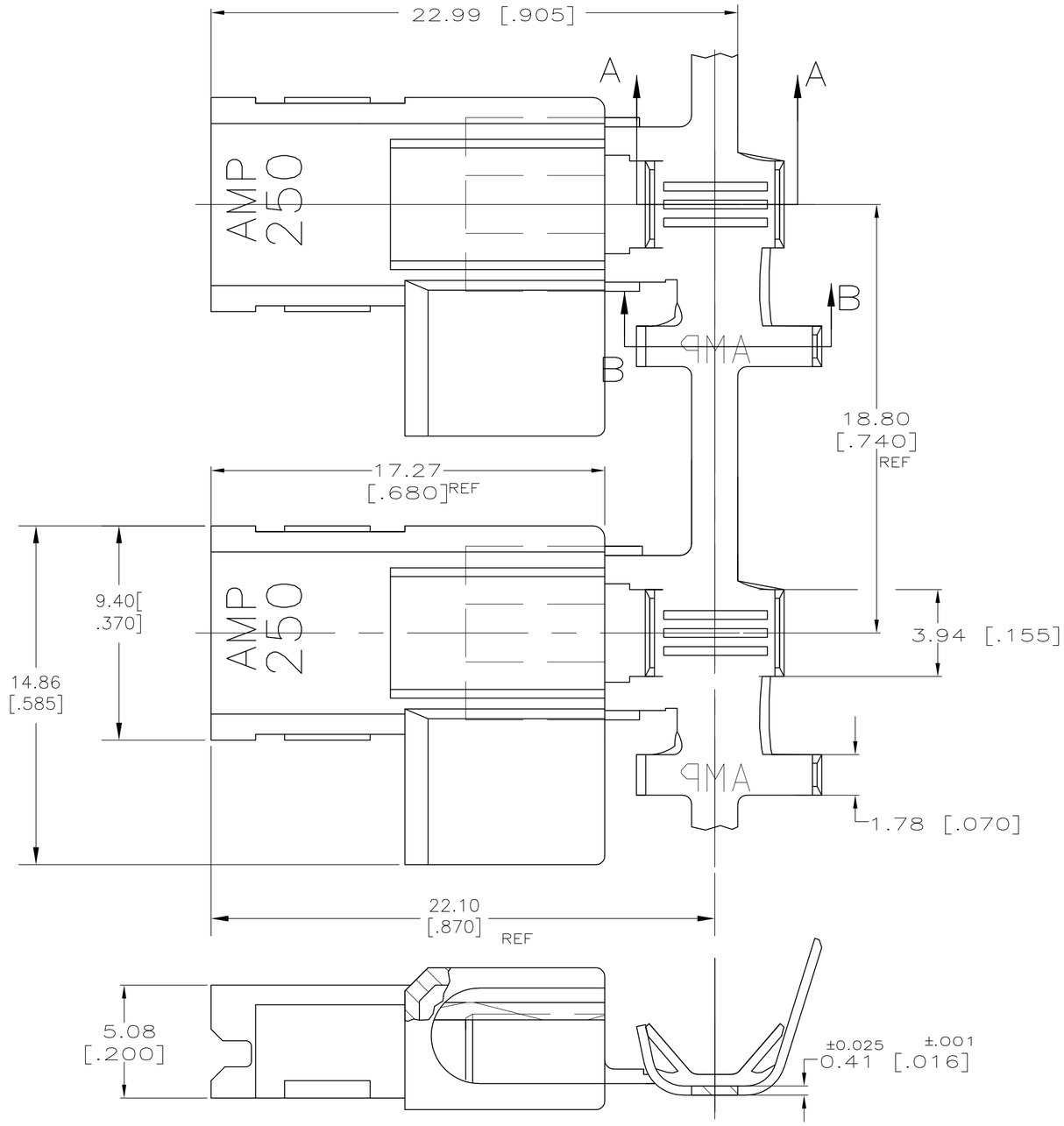

2 INSULATION RANGE TO BE 2.79–4.06 OR TWO AT 2.67 MAX DIA [.110–.160 OR TWO AT .105 MAX].

3 WIRE RANGE: #18–#14 OR TWO #20 OR TWO #18 AWG.

4 FITS .250 X .032 THK FASTON TAB

5 ALTERNATIVE HOUSING FORM

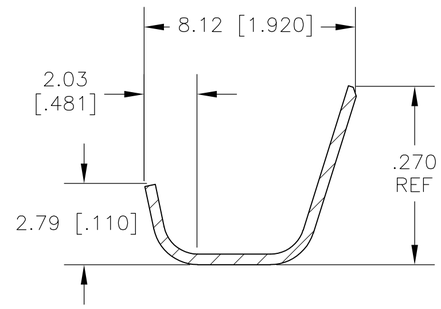

SECTION A–A

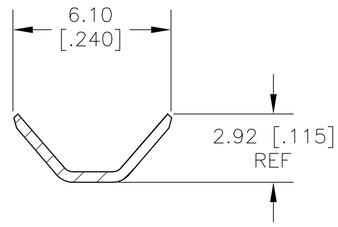

SECTION B–B

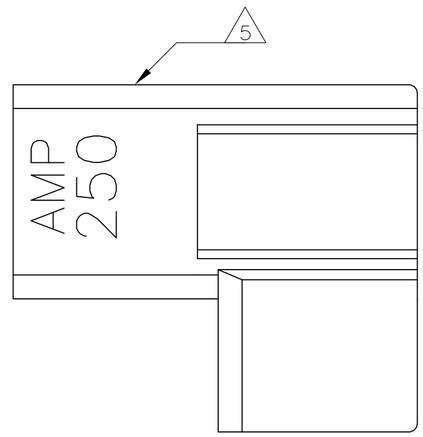

521112

6/6 NYLON / NATURAL	BRASS / PLAIN	521112–1
HOUSING MATERIAL / COLOR	TERMINAL MATERIAL / FINISH	PART NO

THIS DRAWING IS A CONTROLLED DOCUMENT.

DIMENSIONS: INCHES

TOLERANCES UNLESS OTHERWISE SPECIFIED:

0 PLC	± –
1 PLC	± –
2 PLC	± –
3 PLC	± 0.25 [.010]
4 PLC	± –
ANGLES	± –

MATERIAL: SEE TABLE

FINISH: SEE TABLE

DWN	JR RUTH	2/16/96
CHK	P FORTNEY	2/16/96
APVD	D BRATINA	2/16/96
PRODUCT SPEC	108–1285	
APPLICATION SPEC	114–2124	
WEIGHT	–	

Tyco Electronics

Tyco Electronics Corporation
Harrisburg, PA 17105–3608

NAME: ASSEMBLY, RECEPTACLE, FLAG, ULTRA–POD, 6.35 [.250] SERIES
–

SIZE	CAGE CODE	DRAWING NO	RESTRICTED TO
A2	00779	C-521112	–

CUSTOMER DRAWING | SCALE 6:1 | SHEET 1 OF 1 | REV F1