Chipsmall Limited consists of a professional team with an average of over 10 year of expertise in the distribution of electronic components. Based in Hongkong, we have already established firm and mutual-benefit business relationships with customers from,Europe,America and south Asia,supplying obsolete and hard-to-find components to meet their specific needs.

With the principle of “Quality Parts,Customers Priority,Honest Operation,and Considerate Service”,our business mainly focus on the distribution of electronic components. Line cards we deal with include Microchip,ALPS,ROHM,Xilinx,Pulse,ON,Everlight and Freescale. Main products comprise IC,Modules,Potentiometer,IC Socket,Relay,Connector.Our parts cover such applications as commercial,industrial, and automotives areas.

We are looking forward to setting up business relationship with you and hope to provide you with the best service and solution. Let us make a better world for our industry!

Contact us

Tel: +86-755-8981 8866 Fax: +86-755-8427 6832
Email & Skype: info@chipsmall.com Web: www.chipsmall.com
Address: A1208, Overseas Decoration Building, #122 Zhenhua RD., Futian, Shenzhen, China

THIS DRAWING IS UNPUBLISHED. RELEASED FOR PUBLICATION -,- .
© COPYRIGHT - By - ALL RIGHTS RESERVED.

LOC	DIST
AF	50

REVISIONS

P	LTR	DESCRIPTION	DATE	DWN	APVD
	H	REVISED PER ECR-12-013062	17DEC12	KH	KR

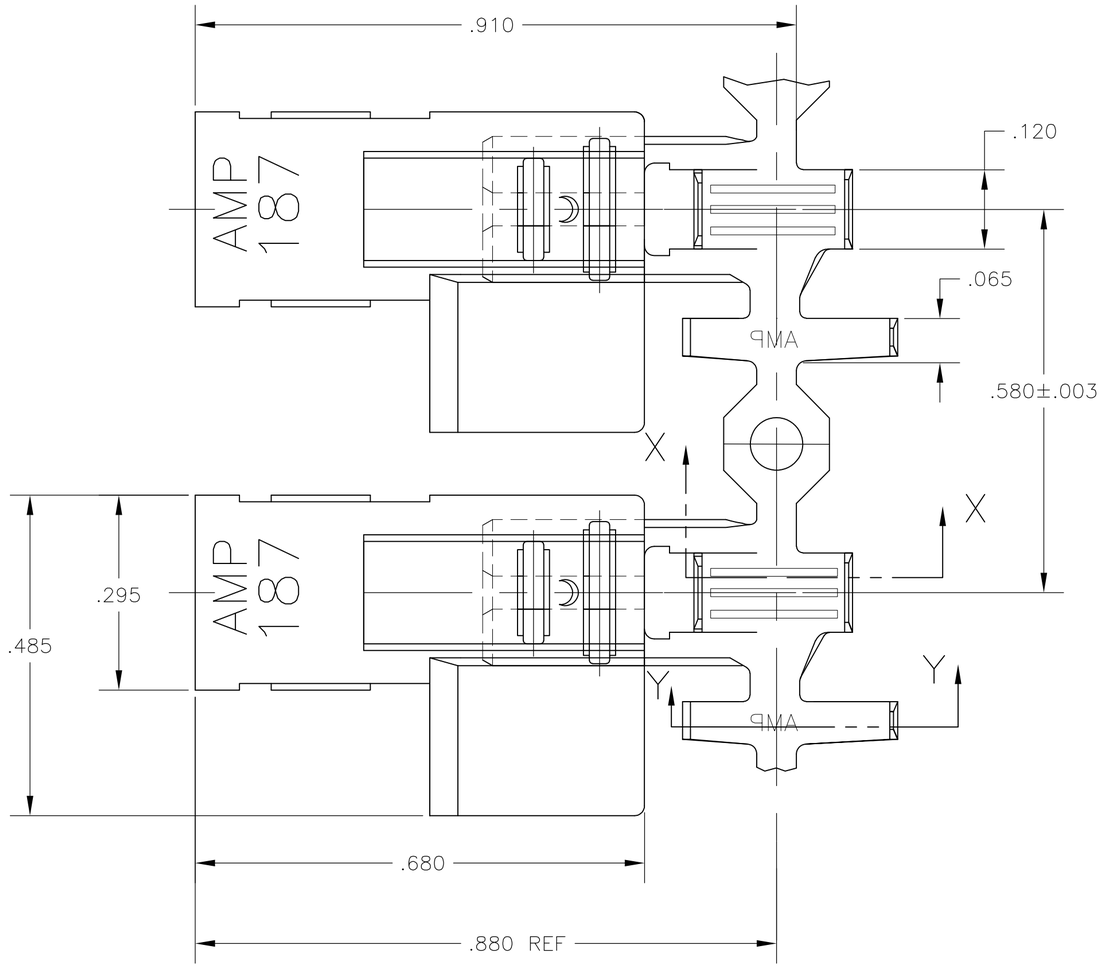

2 WIRE SIZES & COMBINATIONS: #18, #16, #14, (2)#20, (2)#18

3 INSULATION RANGE IS .110–.150 DIA OR TWO AT .110 MAX DIA.

4 MATERIAL;
TERMINAL: BRASS, FINISH SEE TABLE
HOUSING: 6/6 NYLON, V2, NATURAL COLOR

5 FITS .187 X .020±.001 THK FASTON TAB

△6 ALTERNATIVE HOUSING FORM

△7 PREPRODUCTION – FASR REQ

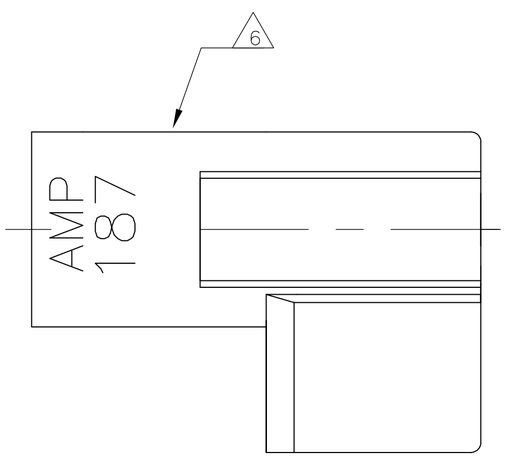

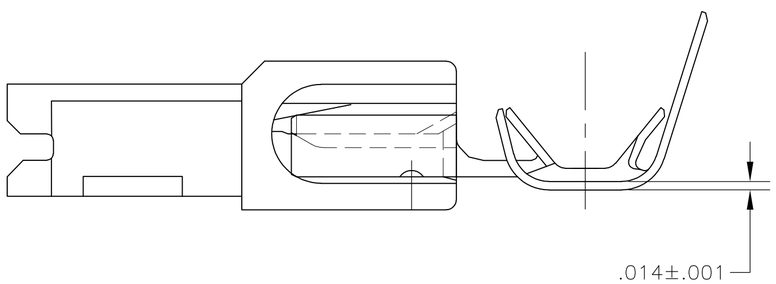

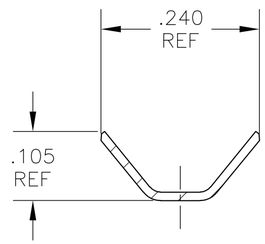

SECTION X–X

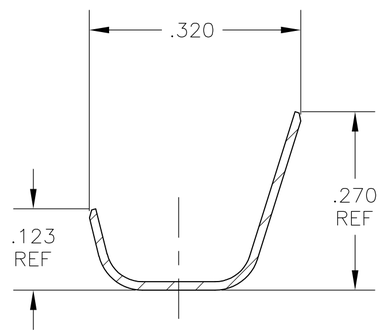

SECTION Y–Y

.000040 MIN TIN PLATE	521471–2
NO PLATING	△7 521471–1
TERMINAL: FINISH	PART NO.

THIS DRAWING IS A CONTROLLED DOCUMENT.

DIMENSIONS: INCHES

TOLERANCES UNLESS OTHERWISE SPECIFIED:
0 PLC ± –
1 PLC ± –
2 PLC ± –
3 PLC ± .010
4 PLC ± –
ANGLES ± –

MATERIAL: SEE NOTES
FINISH: SEE NOTES

DWN JR RUTH 30JUL03
CHK J HUMMEL 24JUL03
APVD KRISTY YI 24JUL03
PRODUCT SPEC 108–2215
APPLICATION SPEC 114–2124
WEIGHT –

CUSTOMER DRAWING

TE Connectivity

NAME: ASSEMBLY, RECPT, FLAG, ULTRA–POD, .187 SERIES 18–14 AWG , V2 HOUSING
–

SIZE	CAGE CODE	DRAWING NO	RESTRICTED TO
A2	00779	C–521471	–

SCALE 6:1 SHEET 1 OF 1 REV H

521471

1471–9 (3/11)