Chipsmall Limited consists of a professional team with an average of over 10 year of expertise in the distribution of electronic components. Based in Hongkong, we have already established firm and mutual-benefit business relationships with customers from,Europe,America and south Asia,supplying obsolete and hard-to-find components to meet their specific needs.

With the principle of “Quality Parts,Customers Priority,Honest Operation,and Considerate Service”,our business mainly focus on the distribution of electronic components. Line cards we deal with include Microchip,ALPS,ROHM,Xilinx,Pulse,ON,Everlight and Freescale. Main products comprise IC,Modules,Potentiometer,IC Socket,Relay,Connector.Our parts cover such applications as commercial,industrial, and automotives areas.

We are looking forward to setting up business relationship with you and hope to provide you with the best service and solution. Let us make a better world for our industry!

Contact us

Tel: +86-755-8981 8866 Fax: +86-755-8427 6832
Email & Skype: info@chipsmall.com Web: www.chipsmall.com
Address: A1208, Overseas Decoration Building, #122 Zhenhua RD., Futian, Shenzhen, China

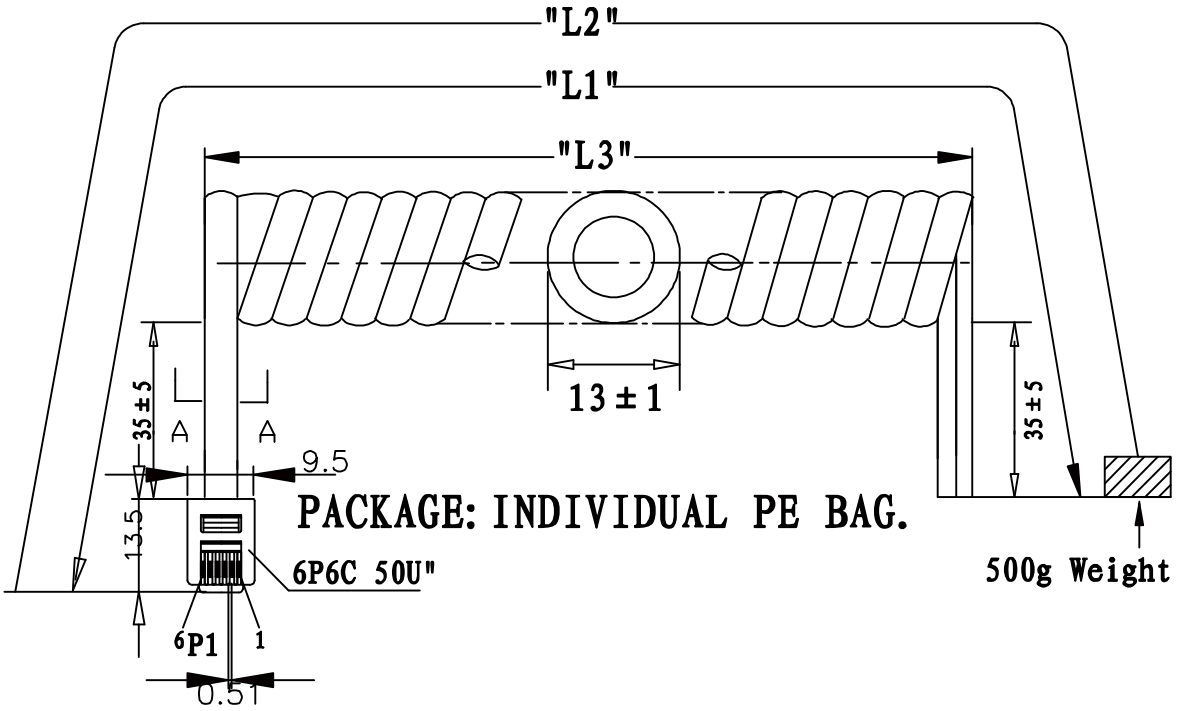

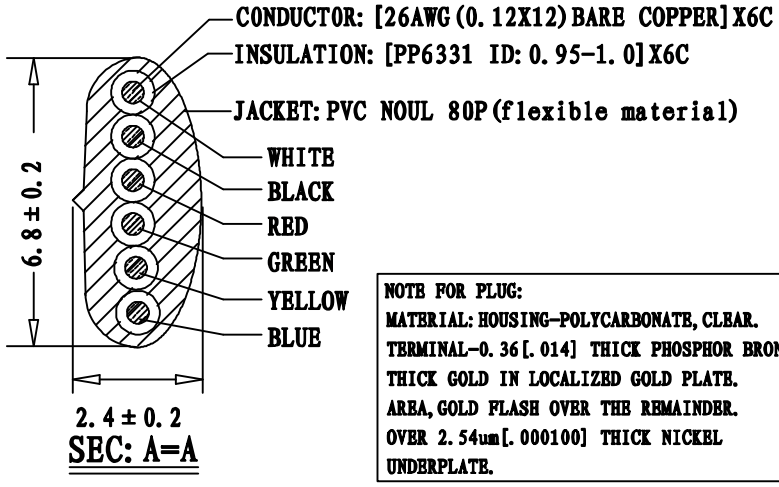

NOTE FOR PLUG:
MATERIAL: HOUSING-POLYCARBONATE, CLEAR.
TERMINAL-0.36[.014] THICK PHOSPHOR BRONZE.
THICK GOLD IN LOCALIZED GOLD PLATE.
AREA, GOLD FLASH OVER THE REMAINDER.
OVER 2.54um[.000100] THICK NICKEL
UNDERPLATE.

P1	COLOR
1	WHITE
2	BLACK
3	RED
4	GREEN
5	YELLOW
6	BLUE

PART NO	DRAWING NO	BUYER COLOR	VENDOR COLOR	RETRACTED LENGTH ("L3")	CUSTOMER Accepted ("L2")	CUT LENGTH "L1"
523-26-6600-BL-0005F	A	Black	BLACK LIGHT	540 ± 50	5.0FT-5.75FT	2600-2800
523-26-6600-BL-0007F	B	Black	BLACK LIGHT	740 ± 50	7.0FT-8.05FT	3700-3900
523-26-6600-BL-0010F	C	Black	BLACK LIGHT	1000 ± 50	10.0FT-11.5FT	5000-5200
523-26-6600-BL-0012F	D	Black	BLACK LIGHT	1300 ± 50	12.0FT-13.8FT	6400-6600
523-26-6600-BL-0014F	E	Black	BLACK LIGHT	1350 ± 50	14.0FT-16.1FT	6900-7100
523-26-6600-BL-0025F	F	Black	BLACK LIGHT	3400 ± 50	25.0FT-28.75FT	13200-13400

REVISE	VERSION	BASIS	CONTENTS
12-02-20	A/0	T0210A	NEW DRAWING

CnC Tech, LLC
Industrial Cable and Connector Technology

IDRAWING NO: 671-338		CUSTOMER: L-671
ITEM NO: 6C COILD CORD P+O PLUG		UNIT: mm
DATE: 2012-02-20		ISSUE: (A/0)
DRAWN:	QE:	QA:
SALES DEPT:	SALES MANAGER:	