Chipsmall Limited consists of a professional team with an average of over 10 year of expertise in the distribution of electronic components. Based in Hongkong, we have already established firm and mutual-benefit business relationships with customers from,Europe,America and south Asia,supplying obsolete and hard-to-find components to meet their specific needs.

With the principle of “Quality Parts,Customers Priority,Honest Operation,and Considerate Service”,our business mainly focus on the distribution of electronic components. Line cards we deal with include Microchip,ALPS,ROHM,Xilinx,Pulse,ON,Everlight and Freescale. Main products comprise IC,Modules,Potentiometer,IC Socket,Relay,Connector.Our parts cover such applications as commercial,industrial, and automotives areas.

We are looking forward to setting up business relationship with you and hope to provide you with the best service and solution. Let us make a better world for our industry!

Contact us

Tel: +86-755-8981 8866 Fax: +86-755-8427 6832
Email & Skype: info@chipsmall.com Web: www.chipsmall.com
Address: A1208, Overseas Decoration Building, #122 Zhenhua RD., Futian, Shenzhen, China

DWG. NO. SD-52661-1011

番号 NO.		部品名 PART NAME	個数 QUAN.	材質 MATERIAL		仕上げ FINISH
1	1′	シェルボディー ボトム SHIEL BODY BOTTOM	1	鋼 STEEL		半田メッキ Sn-Pb
	2′		2	ラッチカバー LATCH COVER	ガラス入りＰＢＴ G.F. PBT	—〃—
	3′			ラッチ LATCH	ステンレス鋼 STAINLESS STEEL	—〃—
2		シェルボディー アッパー SHIEL BODY UPPER	1	鋼 STEEL		半田メッキ Sn-Pb
3		ブーツ BOOT	1	ＰＢＴ PBT		—〃—

①

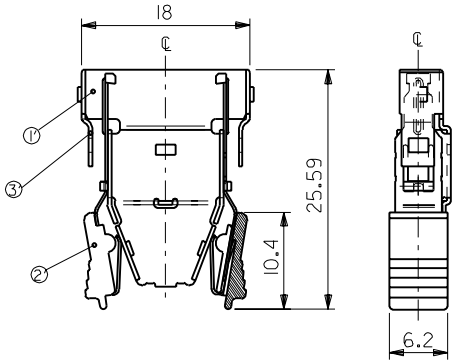

②

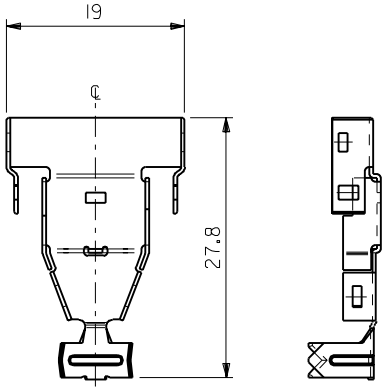

③

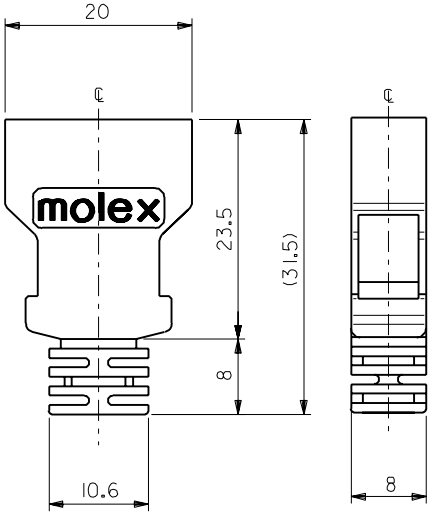

1. 適用電線：
APPLICABLE WIRE

心数	サイズ SIZE	導体 WIRE RANGE	絶縁体外径 INS. RANGE	編組シールド外径 SHIELD RANGE	ジャケット外径 JACKET RANGE
10	28	0.38 (7/0.127)	0.58	3.0	5.0

一般公差 GENERAL TOLERANCES		記号 LTR	変更内容 REVISION RECORD	DR.	CHK.	日付 DATE
角度 ANGLE	±3°					
30 以上 OVER	±0.3					
10 以上 OVER 30 未満 UNDER	±0.25	A	変更 REVISED (T50362)	S.S	Y.I	'95/04/18
10 未満 UNDER	±0.2	0	新規作成 RELEASED	S.S	S.S	'93/12/09

材料 MATERIAL	—〃—	
仕上げ FINISH	—〃—	
適用電線範囲 WIRE RANGE	—〃—	
被覆外径 INS. RANGE	—〃—	
DRAWN BY 93/02/20 S. Akiyama	CHK'D BY S. Suzuka / Y. Oto	
APP'D BY	尺度 SCALE 2-1	

MOLEX-JAPAN CO.,LTD.
日本モレックス株式会社

REVISE ONLY ON CAD SYSTEM

TITLE 名称
1.0 mm PITCH
I/O SHELL COVER

DWG. NO. SD-52661-1011 REV A

ZF3:E110,0373S52661 10.DGN

:MM DIMENSIONS IN METRIC DO NOT SCALE DRAWING

THIS DRAWING CONTAINS INFORMATION THAT IS PROPRIETARY TO MOLEX(JAPAN) AND SHOULD NOT BE USED WITHOUT WRITTEN PERMISSION
本図面は日本モレックス（株）の所有する情報を含むもので当社の許可なく複製を禁止する。

EN-01C(032)MXJ-32