Chipsmall Limited consists of a professional team with an average of over 10 year of expertise in the distribution of electronic components. Based in Hongkong, we have already established firm and mutual-benefit business relationships with customers from,Europe,America and south Asia,supplying obsolete and hard-to-find components to meet their specific needs.

With the principle of “Quality Parts,Customers Priority,Honest Operation,and Considerate Service”,our business mainly focus on the distribution of electronic components. Line cards we deal with include Microchip,ALPS,ROHM,Xilinx,Pulse,ON,Everlight and Freescale. Main products comprise IC,Modules,Potentiometer,IC Socket,Relay,Connector.Our parts cover such applications as commercial,industrial, and automotives areas.

We are looking forward to setting up business relationship with you and hope to provide you with the best service and solution. Let us make a better world for our industry!

Contact us

Tel: +86-755-8981 8866 Fax: +86-755-8427 6832
Email & Skype: info@chipsmall.com Web: www.chipsmall.com
Address: A1208, Overseas Decoration Building, #122 Zhenhua RD., Futian, Shenzhen, China

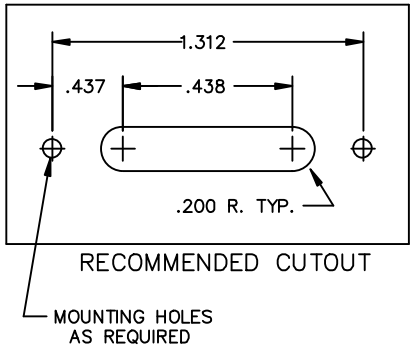

RECOMMENDED CUTOUT

NOTES:

1) VOLTAGE: 100 VDC.
2) CURRENT: 20 AMPS.
3) OPERATING TEMPERATURE: −55°C TO +105°C.
4) MATERIAL: BLACK THERMOPLASTIC OR EQUIV.
5) SCREW TYPE: #6−32 PHILSLOT HD.
6) MARKING: 4 PT. CHARACTERS, WHITE INK.
7) CAPACITANCE: 2500pF MIN./ 5200pF MAX.
8) GROUND PLANE IS TO BE FLAT WITHIN .012".
9) SHIPPING TRAY LABEL MARKING:
   SCI 52F160−002−A DATE CODE
   100V, 20A, 12−22AWG
   UL & CSA LOGOS

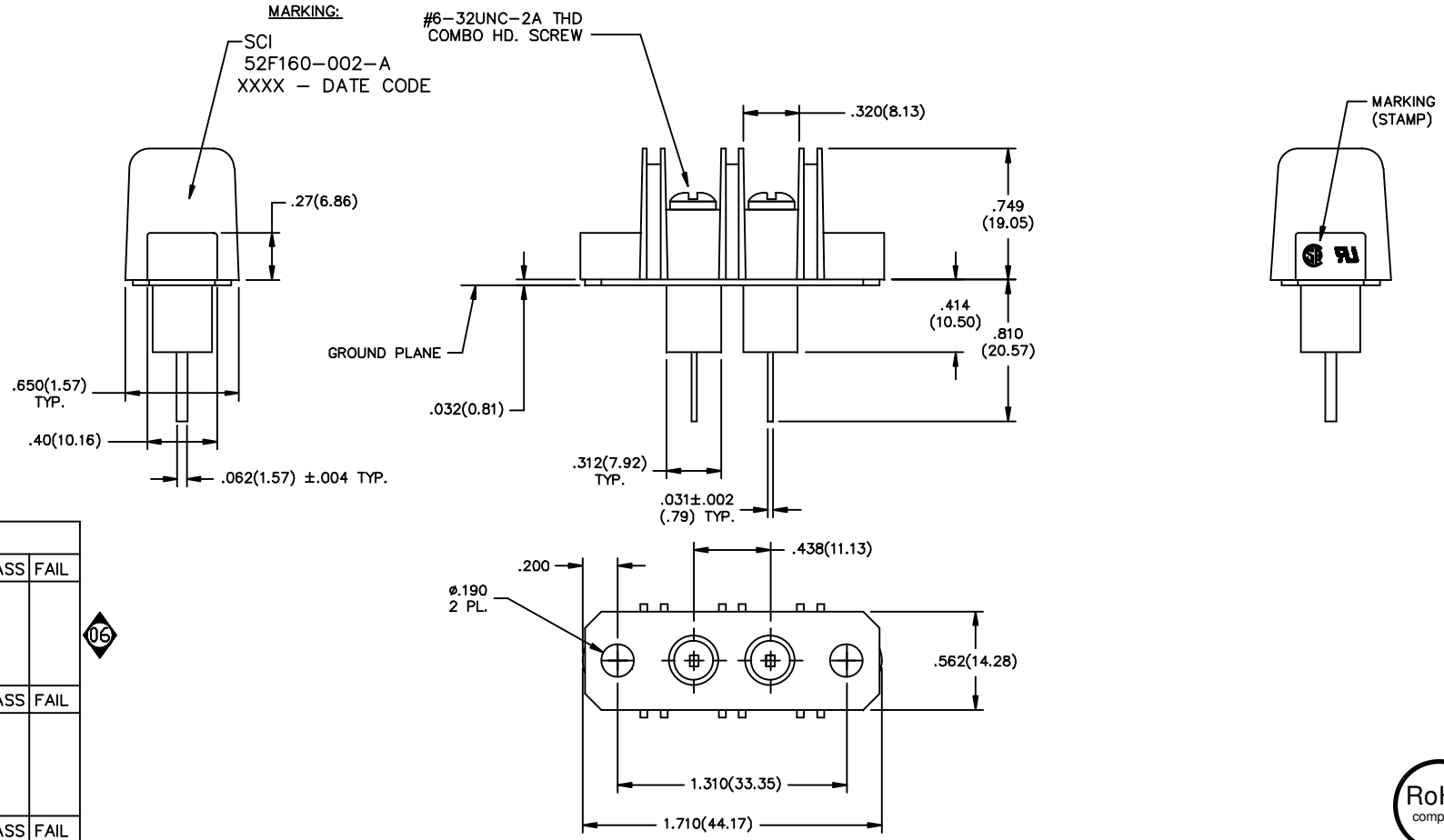

TEST SEQUENCE				
STEP 0400	INSPECTION	VISUAL/MECH.	PASS	FAIL
PER IT 38−0468 INSPECT DIMENSIONS AND WORKMANSHIP. PER MIL−STD−105, LEVEL II, 1%AQL COMMENTS:		OPER:		
STEP 0100	TESTING	CAP./D.F.	PASS	FAIL
PER IT 38−0245 CAP: 2500pF TO 5200pF DF. ≤4% MAX COMMENTS: 100%		OPER:		
STEP 0200	TESTING	DWV	PASS	FAIL
PER IT 38−0245 DWV: 2000 VDC 25°C 1 MINUTE MINIMUM COMMENTS: 100%		OPER:		
STEP 0300	TESTING	I.R.	PASS	FAIL
PER IT 38−0245 IR: 100VDC, 1000 Mohms MIN. 2 MINUTES MAX. COMMENTS: 100%		OPER:		

06

RoHS compliant

REV. NO.	CHANGE NOTICE
06	CN #12452
05	CN 46317−ENG
04	CN 42637−ENG
03	CN 29432−CPD
02	CN 26786−CPD
01	CN 24517−CPD
00	CN 22970−CPD

UNLESS OTHERWISE SPECIFIED DIMENSIONS ARE IN INCHES. (MILLIMETERS) DO NOT SCALE.

THIRD ANGLE PROJECTION

TOLERANCES UNLESS OTHERWISE SPECIFIED
Fractions ± 1/64
Dec. .xx± .03
Dec. .xxx±.020
Angles ±0° 30′

CODE IDENT. NO. OLSP2

api technologies corp.
FAIRVIEW PENNSYLVANIA

Dwn. KAUFFMAN
Date 4−14−15
Engr. McALEVY
Sheet 1 of 1

Description: FILTER TERMINAL BLOCK

52F160−002−A

Quality Products From The Specialists In Electro−Magnetic Compatibility