Chipsmall Limited consists of a professional team with an average of over 10 year of expertise in the distribution of electronic components. Based in Hongkong, we have already established firm and mutual-benefit business relationships with customers from,Europe,America and south Asia,supplying obsolete and hard-to-find components to meet their specific needs.

With the principle of “Quality Parts,Customers Priority,Honest Operation,and Considerate Service”,our business mainly focus on the distribution of electronic components. Line cards we deal with include Microchip,ALPS,ROHM,Xilinx,Pulse,ON,Everlight and Freescale. Main products comprise IC,Modules,Potentiometer,IC Socket,Relay,Connector.Our parts cover such applications as commercial,industrial, and automotives areas.

We are looking forward to setting up business relationship with you and hope to provide you with the best service and solution. Let us make a better world for our industry!

Contact us

Tel: +86-755-8981 8866 Fax: +86-755-8427 6832
Email & Skype: info@chipsmall.com Web: www.chipsmall.com
Address: A1208, Overseas Decoration Building, #122 Zhenhua RD., Futian, Shenzhen, China

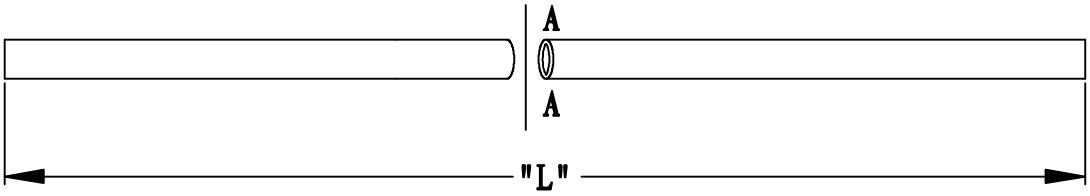

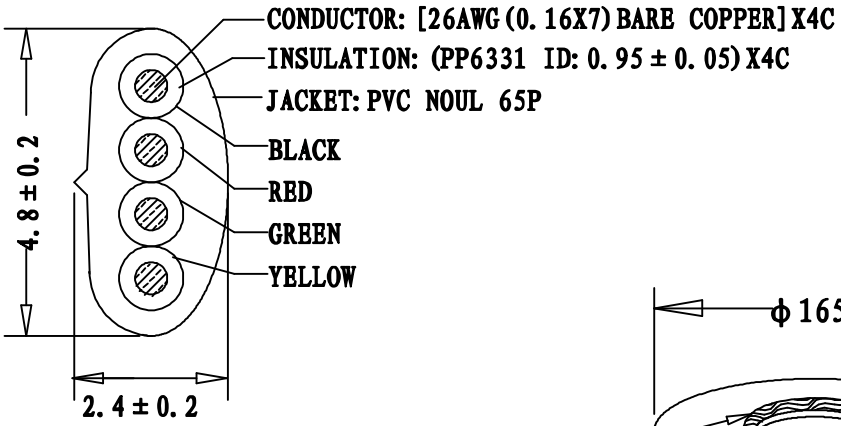

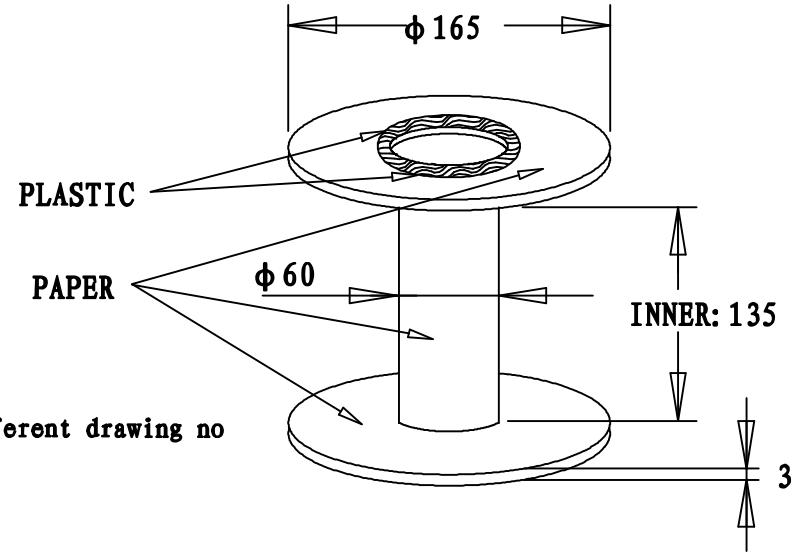

Note: Here P/N According to different drawing no

P/N#530-26-04-BL-0500F
"ROHS Compliant"

P/N LABEL

500FT/R. "PE"FOAM WRAPPED

Note: 50X20MM, Black word in white bottom,

PART NO	DRAWING NO	WIRE LENGTH "L"	BUYER COLOR	VENDOR COLOR
530-26-04-BL-0500F	A	500FT/R	Black	BK LIGHT
530-26-04-WH-0500F	B	500FT/R	White	W-103 LIGHT
530-26-04-SV-0500F	C	500FT/R	Silver	S49-1 LIGHT

REVISE	VERSION	BASIS	CONTENTS
12-02-20	A/0	T0210A	NEW DRAWING

CnC Tech, LLC
Industrial Cable and Connector Technology

IDRAWING NO: 671-353	CUSTOMER: L-671
ITEM NO: 500FT/R 4C CABLE	UNIT: mm
DATE: 2012-02-20	ISSUE: (A/0)
DRAWN: QE:	QA:
SALES DEPT:	SALES MANAGER: