Chipsmall Limited consists of a professional team with an average of over 10 year of expertise in the distribution of electronic components. Based in Hongkong, we have already established firm and mutual-benefit business relationships with customers from,Europe,America and south Asia,supplying obsolete and hard-to-find components to meet their specific needs.

With the principle of “Quality Parts,Customers Priority,Honest Operation,and Considerate Service”,our business mainly focus on the distribution of electronic components. Line cards we deal with include Microchip,ALPS,ROHM,Xilinx,Pulse,ON,Everlight and Freescale. Main products comprise IC,Modules,Potentiometer,IC Socket,Relay,Connector.Our parts cover such applications as commercial,industrial, and automotives areas.

We are looking forward to setting up business relationship with you and hope to provide you with the best service and solution. Let us make a better world for our industry!

Contact us

Tel: +86-755-8981 8866 Fax: +86-755-8427 6832
Email & Skype: info@chipsmall.com Web: www.chipsmall.com
Address: A1208, Overseas Decoration Building, #122 Zhenhua RD., Futian, Shenzhen, China

DRAWING MADE IN THIRD ANGLE PROJECTION

THIS DRAWING IS UNPUBLISHED. | RELEASED FOR PUBLICATION ,19 .

© COPYRIGHT 19 BY AMP INCORPORATED. ALL INTERNATIONAL RIGHTS RESERVED.

LOC	DIST
GP	00

REVISIONS

P	F	ZONE	LTR	DESCRIPTION	DATE	APPD
			O	RELEASED PER PPR	3/8/93	BE
			A	REV PER EC 0010-0128-94	2/7/94	BE
			B	OBS -2 PER EC 0410-0185-96	10 JUL 97	VR
			C	REV PER EC 0S1A-0357-00	13NOV00	RW
			D	REV PER 0S1A-0101-01	05/23/01	RW

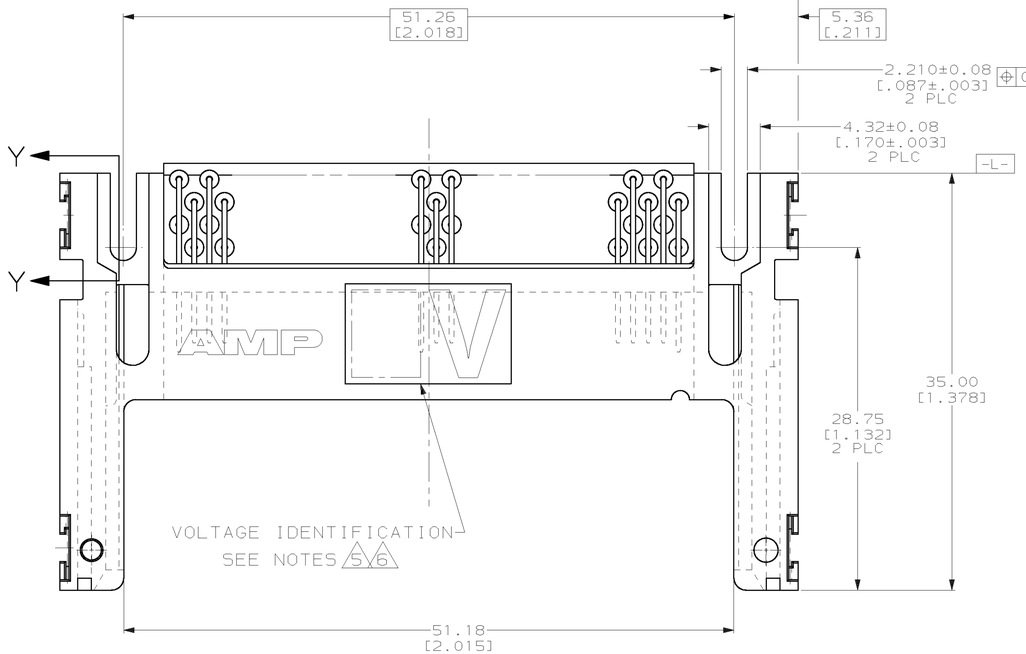

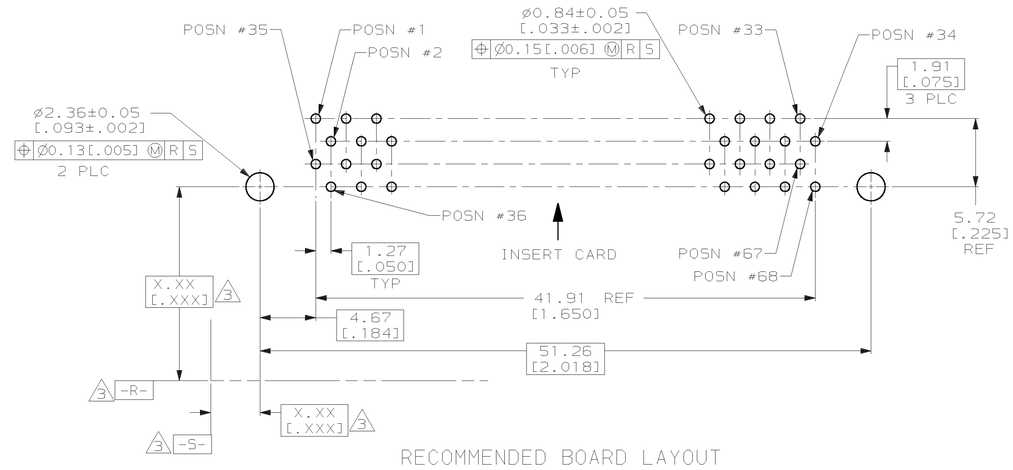

RECOMMENDED BOARD LAYOUT

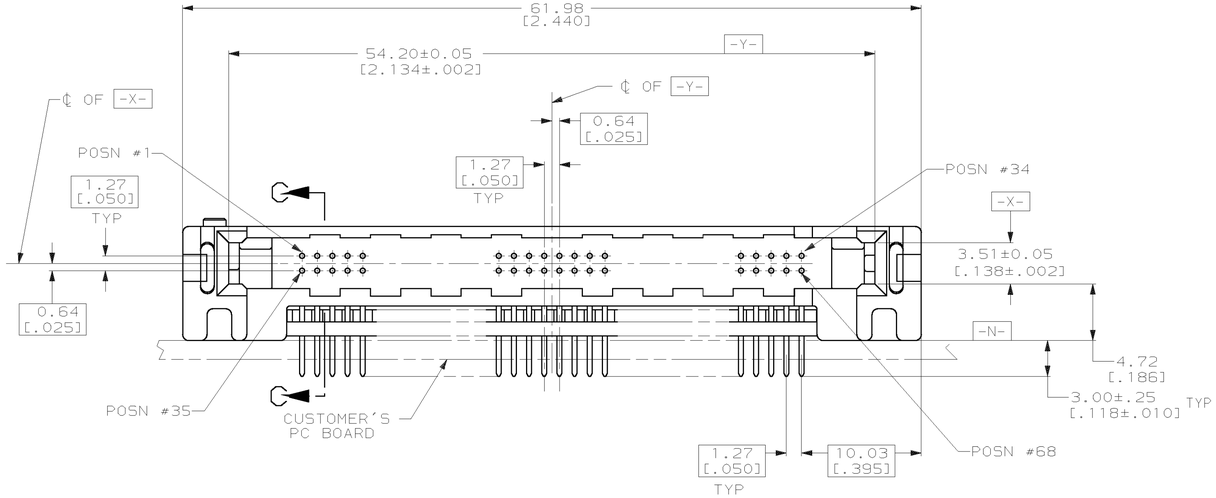

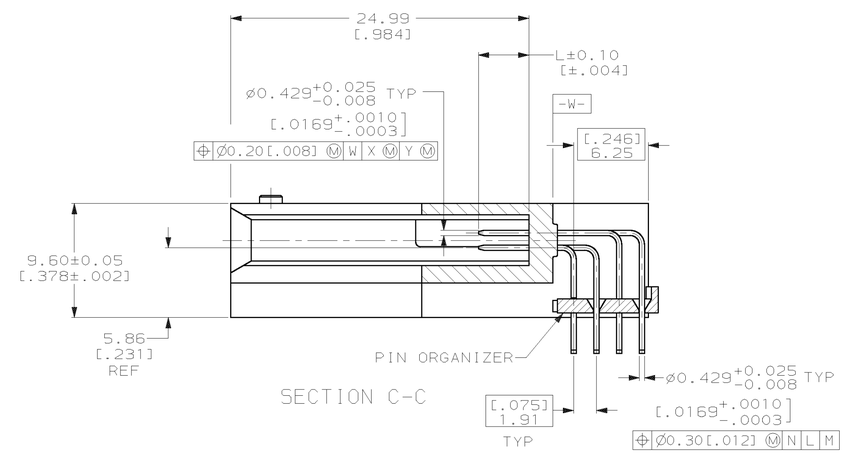

SECTION C-C

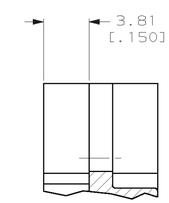

SECTION Y-Y

6	1,17,34 35,51,68	ALL OTHER PINS	36,67	535655-2
5	1,17,34 35,51,68	ALL OTHER PINS	36,67	535655-1
VOLTAGE KEYING & IDENTIFICATION	5.0 [.197]	4.25 [.167]	3.5 [.138]	
	"L" (PIN LENGTH) AND LOCATION			PART NO

1. 0.00076[.000030] MINIMUM GOLD IN CONTACT AREA, 0.00381[.000150] MIN TIN-LEAD ON SOLDER TAILS, ALL OVER 0.00127[.000050] MINIMUM NICKEL
2. CUSTOMER TO PROVIDE CARD GUIDANCE SYSTEM
3. DATUMS AND BASIC DIMENSIONS ESTABLISHED BY CUSTOMER
4. CONNECTOR REQUIRES USE OF 2 - SIZE 2M SCREWS FOR FASTENING TO PRINTED CIRCUIT BOARD
5. ASSEMBLY KEYED FOR 5 VOLT CARDS
6. ASSEMBLY KEYED FOR LOW VOLT CARDS (3.3V)

THIS DRAWING IS A CONTROLLED DOCUMENT FOR AMP INCORPORATED. IT IS SUBJECT TO CHANGE AND THE CONTROLLING ENGINEERING ORGANIZATION SHOULD BE CONTACTED FOR THE LATEST REVISION.

DO NOT SCALE PRINT.
UNLESS SPECIFIED
DIMENSIONS IN mm [INCHES]
TOLERANCES ON :
2 PLC DEC ± 0.13 [.005]
3 PLC DEC ± -
ANGLES ± -

MATERIAL
HOUSING & ORGANIZER: LCP, COLOR; BLACK
PIN: BRASS

FINISH
PIN: 1

DR 3/8/93 J MOSER
CHK 3/8/93 B ELICKER
APPD 3/8/93 B ELICKER
APPD 3/8/93 B FLINCHBAUGH
PRODUCT SPEC -
APPLICATION SPEC -
WEIGHT 8.5 GRAMS

AMP Incorporated
Harrisburg, PA 17105-3608

NAME
PIN HEADER ASSY, 68 POSN, RAISED HEIGHT, TOP BD MTG, THRU-HOLE, AMP MEMORY CARD

SIZE	CAGE CODE	DRAWING NO
D	00779	C-535655
SCALE 4:1		SHEET 1 OF 1

CUSTOMER DRAWING

AMP 1756-3 REV 3-92

23-MAY-01 14:27:08 amp45876 /home/amp45876/edmmod