Chipsmall Limited consists of a professional team with an average of over 10 year of expertise in the distribution of electronic components. Based in Hongkong, we have already established firm and mutual-benefit business relationships with customers from,Europe,America and south Asia,supplying obsolete and hard-to-find components to meet their specific needs.

With the principle of “Quality Parts,Customers Priority,Honest Operation,and Considerate Service”,our business mainly focus on the distribution of electronic components. Line cards we deal with include Microchip,ALPS,ROHM,Xilinx,Pulse,ON,Everlight and Freescale. Main products comprise IC,Modules,Potentiometer,IC Socket,Relay,Connector.Our parts cover such applications as commercial,industrial, and automotives areas.

We are looking forward to setting up business relationship with you and hope to provide you with the best service and solution. Let us make a better world for our industry!

Contact us

Tel: +86-755-8981 8866 Fax: +86-755-8427 6832
Email & Skype: info@chipsmall.com Web: www.chipsmall.com
Address: A1208, Overseas Decoration Building, #122 Zhenhua RD., Futian, Shenzhen, China

DRAWING MADE IN THIRD ANGLE PROJECTION

THIS DRAWING IS UNPUBLISHED. RELEASED FOR PUBLICATION .19 .

© COPYRIGHT 19 BY AMP INCORPORATED. ALL INTERNATIONAL RIGHTS RESERVED.

LOC	DIST
AD	25

P	F	ZONE	LTR	DESCRIPTION	DATE	APPD
			H	EC 0504-0028-96	10/3/96	CR
			J	EC 0504-0087-96	11/18/96	CR
			K	REV PER EC 0512-0016-03	16DEC03.	AS

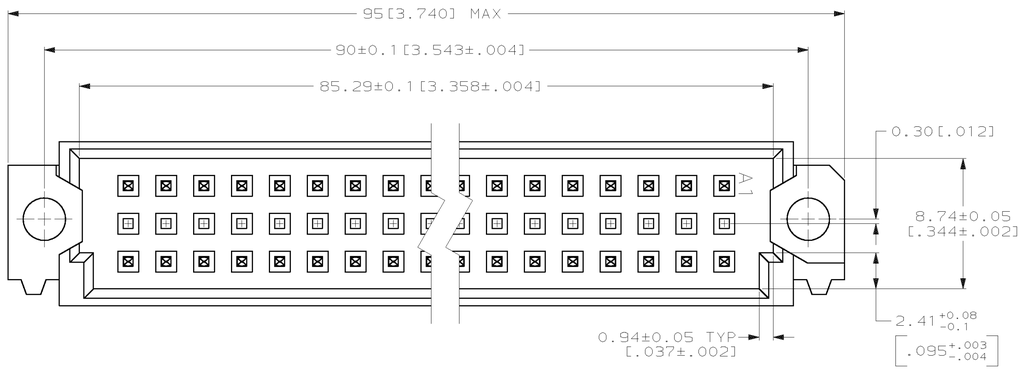

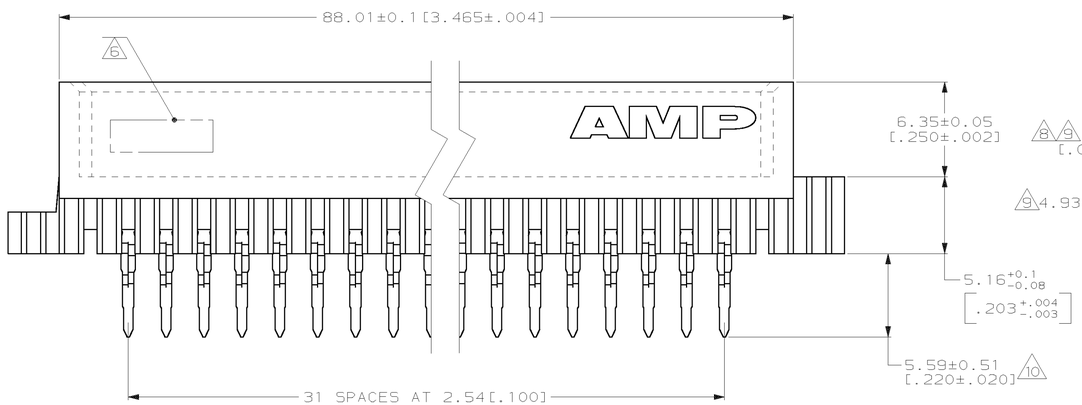

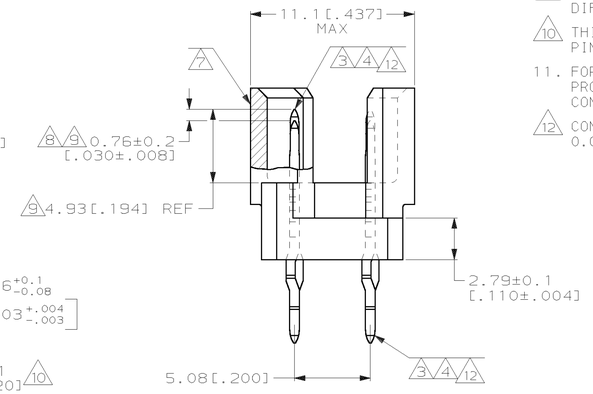

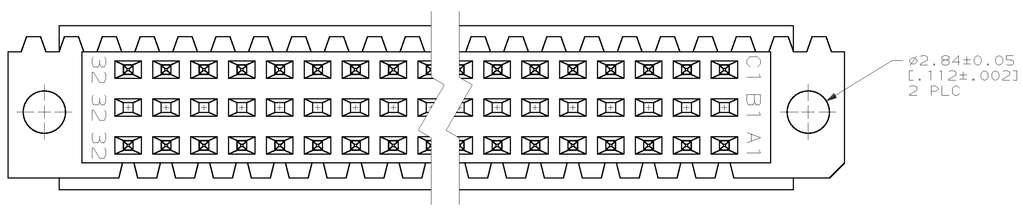

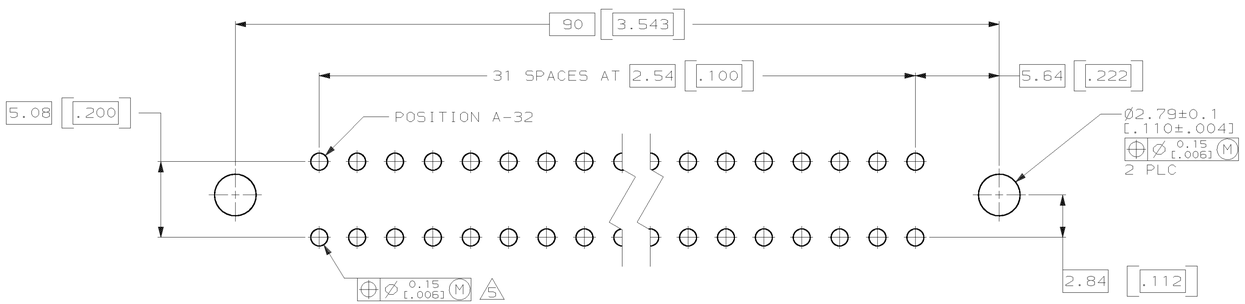

PC BOARD LAYOUT

1. HOUSING MATERIAL: GLASS-FILLED POLYESTER. COLOR: GRAY.
2. POST MATERIAL: PHOSPHOR BRONZE.
3. POST FINISH: DIN 41612 CLASS 3 IN CONTACT AREA. TIN-LEAD PLATE ON POSTS.
4. POST FINISH: DIN 41612 CLASS 2 IN CONTACT AREA. TIN-LEAD PLATE ON POSTS.
5. PC BOARD HOLES REQUIRED FOR ACTION PIN CONTACTS ARE 1.151[.0453] DRILL DIAMETER PLATED THROUGH WITH 0.02-.0.08[.001-.003] COPPER AND 0.008[.0003] MINIMUM TIN-LEAD PLATING. FINISHED HOLE AFTER PLATING, 0.94-1.09[.037-.043] DIAMETER.
6. PART NUMBER, DATE CODE MARKED THIS APPROXIMATE AREA.
7. MARKING ON THIS SIDE.
8. FOR "MFBL" APPLICATIONS, A 2.36[.093] MINIMUM THICK PC BOARD IS REQUIRED. PROGRAMMABLE SEATING TOOL 768216-2 MUST BE USED.
9. TO BE 4.16[.164] REF FOR LAST MAKE PINS AFTER SEATING. POST LENGTH DIFFERENCE BETWEEN SHORT AND LONG PINS TO BE 0.76±0.2[.030±.008] AFTER SEATING.
10. THIS DIMENSION WILL BE 6.35±0.51[.250±.020] AFTER SEATING FOR PINS WITH 4.17[.164] REF MATING POST.
11. FOR 1.57[.062] THICK PC BOARD APPLICATIONS, USE SEATING TOOL 768211-2. PROGRAMMABLE SEATING TOOL 768216-2 WITH PUSH PINS FOR MAKE FIRST CONTACTS ONLY, CAN ALSO BE USED.
12. CONTACT FINISH: 0.00076[.000030] GOLD IN CONTACT AREA. 0.00127[.000050] NICKEL UNDERPLATE ALL OVER. TIN-LEAD PLATE ON POSTS.

SUPERSEDED BY 536098-5	3	1-32	X	-	X	64	536098-9
	4	1-32	X	-	X	64	536098-5
OBSOLETE	12	1-32	X	-	X	64	536098-4
NOTES		POSITIONS LOADED	C	B	A	NO. OF LOADED POSITION	ASSY PART NUMBER
			ROWS LOADED				

PART NO

DO NOT SCALE PRINT.
UNLESS SPECIFIED
DIMENSIONS IN mm [INCHES]
TOLERANCES ON :
1 PLC DEC ± -
2 PLC DEC ± 0.13[.005]
ANGLES ± -

MATERIAL
HOUSING: 1
POST: 2

FINISH
POST: 3 4 12

DR L. BRINER 1/14/92
CHK D.C. RUBENDALL 1/15/92
APPD D.C. RUBENDALL 1/15/92
APPD K.R. PARMER 1/15/92

PRODUCT SPEC -

APPLICATION SPEC -

WEIGHT -

AMP Incorporated
Harrisburg, PA 17105-3608

NAME
PIN ASSEMBLY, EUROCARD, TYPE R,
MFBL OR FOR 1.57[.062] PC BOARD

SIZE	CAGE CODE	DRAWING NO
D	00779	536098
SCALE 5:1		SHEET 1 OF 1

CUSTOMER DRAWING

AMP 1756-3 REV 11-89

16-DEC-03 11:06:38 us043446 /home/us043446/dmmod