Chipsmall Limited consists of a professional team with an average of over 10 year of expertise in the distribution of electronic components. Based in Hongkong, we have already established firm and mutual-benefit business relationships with customers from,Europe,America and south Asia,supplying obsolete and hard-to-find components to meet their specific needs.

With the principle of “Quality Parts,Customers Priority,Honest Operation,and Considerate Service”,our business mainly focus on the distribution of electronic components. Line cards we deal with include Microchip,ALPS,ROHM,Xilinx,Pulse,ON,Everlight and Freescale. Main products comprise IC,Modules,Potentiometer,IC Socket,Relay,Connector.Our parts cover such applications as commercial,industrial, and automotives areas.

We are looking forward to setting up business relationship with you and hope to provide you with the best service and solution. Let us make a better world for our industry!

Contact us

Tel: +86-755-8981 8866 Fax: +86-755-8427 6832
Email & Skype: info@chipsmall.com Web: www.chipsmall.com
Address: A1208, Overseas Decoration Building, #122 Zhenhua RD., Futian, Shenzhen, China

PASSMASS	ABMASS

DWG NO C-539753-2

PROJECT NO.: -

USED ON -

ERGOCRIMP DIE SET FOR MINI-UMNL
WIRE RANGE 0,35 - 1,0 mm²

Matrize in Kombination mit Ergocrimp Basishandzange TE P/N 539635-1 verwenden
Use die set in combination with Ergocrimp basis hand tool TE P/N 539635-1

Matrize im Karton mit Bedienungsanleitung 411-18223 verpackt
Die set packed in a cardboard with instruction sheet 411-18223

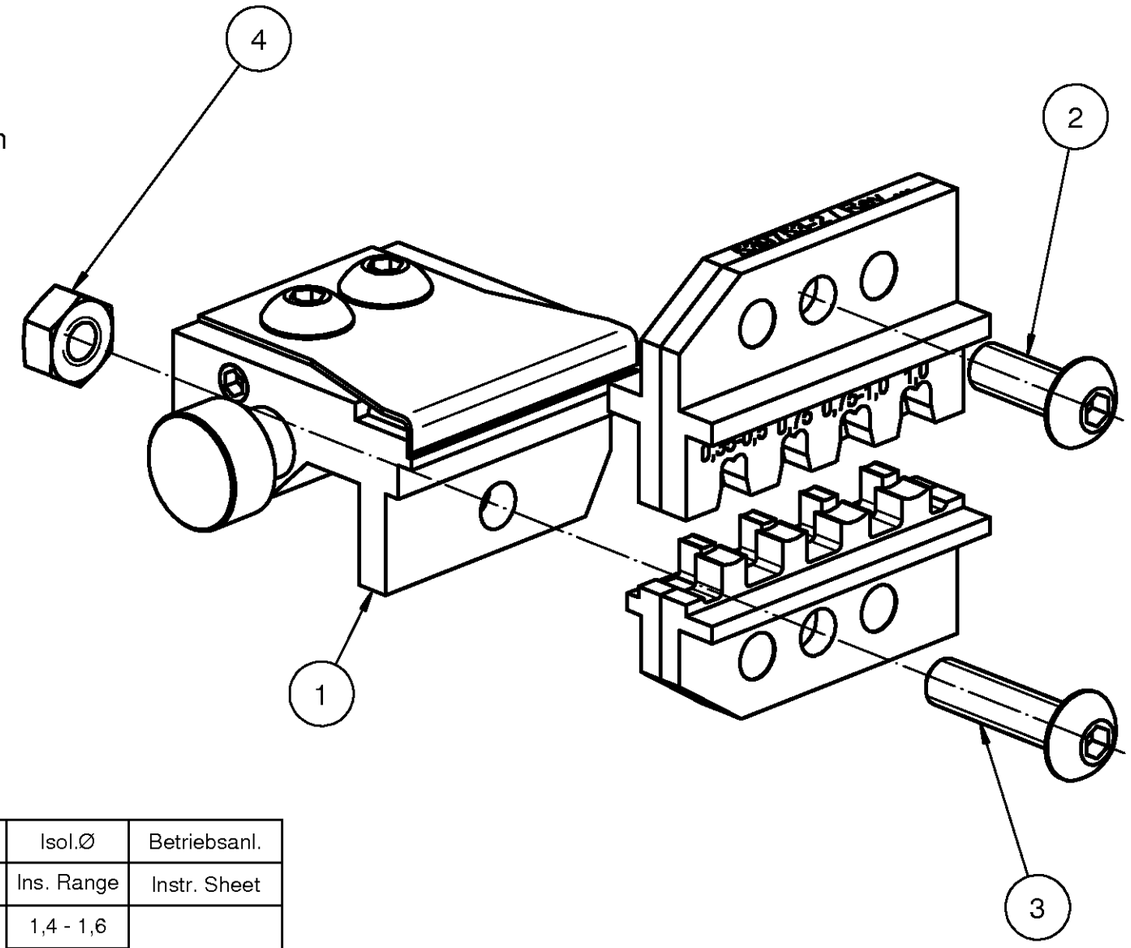

539753-2	1	2-0744010-3	Instruction Sheet	Bedienungsanleitung	5
	1	0-0519021-8	Nut M4 DIN 934	Mutter M4 DIN 934	4
	1	1-0519151-1	Screw M4x16	Schraube M4x16	3
	1	8-0539634-5	Screw M4x11	Schraube M4x11	2
	1	0-1579005-7	Contact Locator	Kontaktpositionierer	1
	QTY Stck	PN	Description	Benennung	Pos.

Kontakt	DGB (mm²)	Drahtcrimp / Wire Crimp		Isolationscrimp / Insulation Crimp		Isol.Ø	Betriebsanl.
Contact	Wire Range	Hoehe / Height mm	Breite / Width mm	Hoehe / Height mm	Breite / Width mm	Ins. Range	Instr. Sheet
170364 / 170366	0,35 - 0,50	0,84 ±0,05	1,57 F	- - - -	2,79 F	1,4 - 1,6	411-18223
	0,75	1,04 ±0,05		- - - -		1,7 - 1,9	
171638 / 171639	0,50 - 0,75	1,07 ±0,05	1,78 F	- - - -	3,30 F	1,6 - 1,9	
	1,00	1,26 ±0,05		- - - -		1,9 - 2,1	

FREIMASSTOLERANZEN NACH DIN 7168 (WERTE IN mm)
1) ABWEICHEND VON DIN 7168 2) LÄNGE DES KÜRZEREN SCHENKELS

NENNMASS-BEREICH 1)		ÜBER	0.5	3	6	30	120	400
		BIS	3	6	30	120	400	1000
ABMASSE	LÄNGEN-MASSE	FEIN	± 0.05	± 0.05	± 0.1	± 0.15	± 0.2	± 0.3
		MITTEL	± 0.1	± 0.1	± 0.2	± 0.3	± 0.5	± 0.8
	RADIEN U. FASEN		± 0.2	± 0.5	± 1	± 2	± 4	± 4
WINKELABMASSE 1) 2)			± 1°	± 1°	± 30'	± 20'	± 10'	± 5'

GENERAL TOLERANCES ACC. TO DIN 7168 (VALUES IN mm)
1) DEVIATING FROM DIN 7168 2) LENGHT OF SHORT ANGLE SIDE

TEIL IM BEREICH X__ MIT PN;STRICH-NR.(-1 WIE GEZ.), REVISION-STAND UND LIEFERANTENSYMBOL GEKENNZEICHNET

PART TO BE MARKED WITH PN;DASH NO. (-1 AS SHOWN), REV. STATUS AND VENDORS MARK IN AREA X__

OBERFLÄCHENVERGLEICHSTABELLE

DIN3141 R3 — R_a in µm DIN ISO 1302: roh, 6.3, 1.6, 0.4, 0.1 — BOHRG. OHNE ANGABE 12.5

ALLE UNBEMASSTE KANTEN 0.2x45° ENTGRATET

REMOVE BURRS, BREAK SHARP EDGES 0.2x45°

HOLE NOT SPEC.

LOC AI

DIST -

P	LTR	REVISION RECORD	DATE	DWN	APVD
					-
					-
					-

FINISH

DIMENSIONS: mm

TOLERANCES UNLESS OTHERWISE SPECIFIED:
n. ISO 2015
n. ISO 2768 mH - E
n. DIN 16901 - 140
0 PLC ±.
1 PLC ±.
2 PLC ±.
3 PLC ±.
4 PLC ±.

ANGLES: -

SURFACE TEXTURE: -

DWN 19.06.2008 P. Demmer

CHK 19.06.2008 Ch. Witt

APVD 19.06.2008 Ch. Witt

MATERIAL

HEAT TREAT

Gewicht / Weight in Kg 0,072

Tyco Electronics

Tyco Electronics AMP GmbH
64625 Bensheim (Germany)

NAME ERGOCRIMP-DIE SET FOR MINI-UMNL 0,35 - 1,0 mm²
Ergocrimp Matrize für MINI-UMNL 0,35 - 1,0 mm²

SCALE	SIZE	DRAWING NO	SHEET	REV
2:1	A3	C-539753-2	1 OF 1	A

AMP 3306-7 REV 23FEB95

THIS DRAWING IS A CONTROLLED DOCUMENT FOR AMP INCORPORATED. ANY REVISIONS TO THIS DRAWING MUST BE APPROVED BY THE CONTROLLING ENGINEERING ORGANIZATION AND SHOULD BE CONTACTED FOR THE LATEST REVISION.

DIESES ZEICHNUNGSDOKUMENT WIRD DURCH AMP INCORPORATED KONTROLLIERT. ÄNDERUNGEN, DIE DEM TECHNISCHEN FORTSCHRITT DIENEN, SIND VORBEHALTEN. DEN JEWEILS LETZTGÜLTIGEN ÄNDERUNGSSTAND ERFAHREN SIE AUF ANFRAGE.

THIS INFORMATION IS CONFIDENTIAL AND IS DISCLOSED TO YOU ON THE CONDITION THAT IT WILL NOT BE DISCLOSED BY YOU TO OTHER THAN AMP PERSONNEL WITHOUT WRITTEN AUTHORIZATION FROM AMP INCORPORATED. D - 63225 LANGEN