Chipsmall Limited consists of a professional team with an average of over 10 year of expertise in the distribution of electronic components. Based in Hongkong, we have already established firm and mutual-benefit business relationships with customers from,Europe,America and south Asia,supplying obsolete and hard-to-find components to meet their specific needs.

With the principle of “Quality Parts,Customers Priority,Honest Operation,and Considerate Service”,our business mainly focus on the distribution of electronic components. Line cards we deal with include Microchip,ALPS,ROHM,Xilinx,Pulse,ON,Everlight and Freescale. Main products comprise IC,Modules,Potentiometer,IC Socket,Relay,Connector.Our parts cover such applications as commercial,industrial, and automotives areas.

We are looking forward to setting up business relationship with you and hope to provide you with the best service and solution. Let us make a better world for our industry!

Contact us

Tel: +86-755-8981 8866 Fax: +86-755-8427 6832
Email & Skype: info@chipsmall.com Web: www.chipsmall.com
Address: A1208, Overseas Decoration Building, #122 Zhenhua RD., Futian, Shenzhen, China

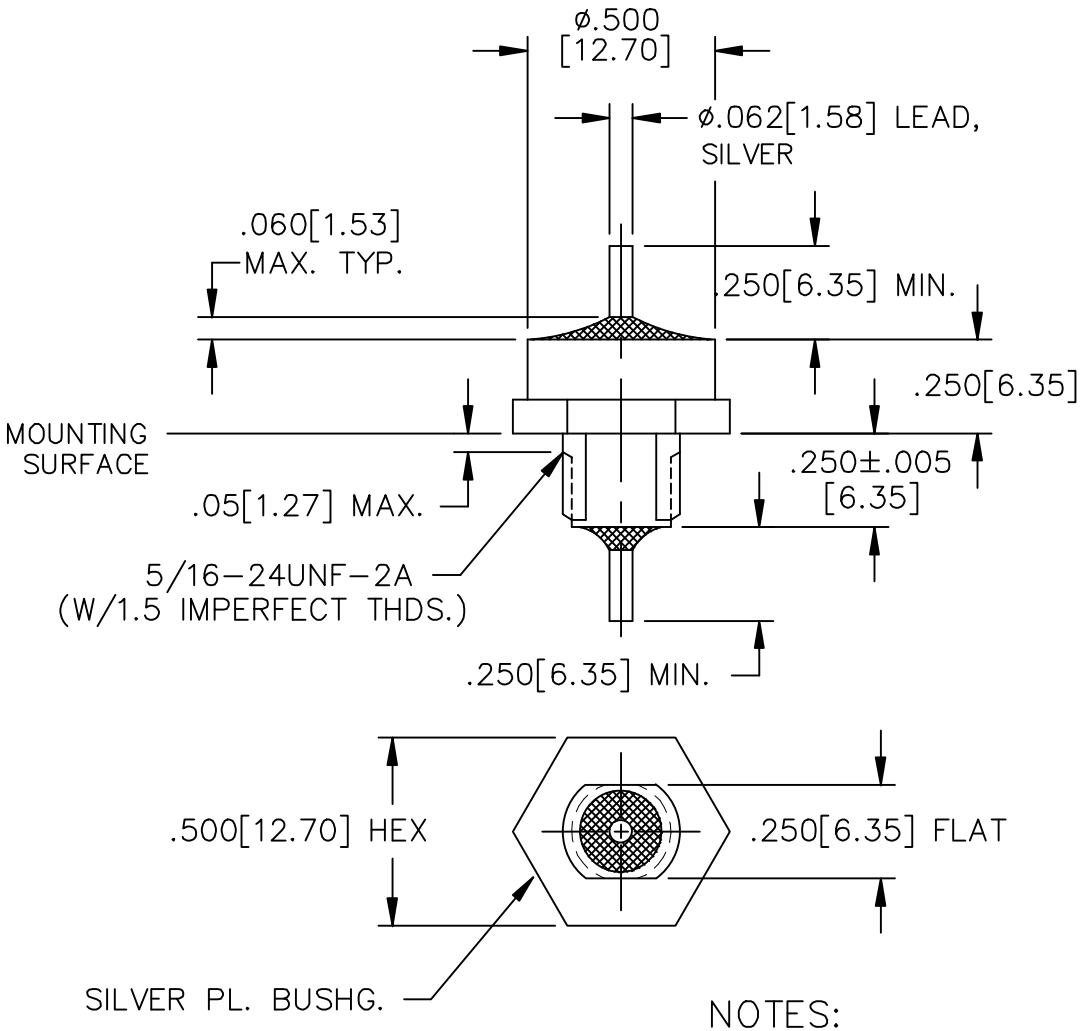

CAPACITANCE	10nF±20%
TEMP. RANGE	-55°C/+125°C
CURRENT	25 AMPS
WORKING VOLTAGE @125°C	600 VDC 240 VAC MAX., 400Hz
DC RESISTANCE	.001 OHMS MAX.
IL=PER MIL-STD-220	
FREQ. MHz	I.L. (db)
1	3
10	20
100	35
1 GHz	57
10GHz	57

SCHEMATIC

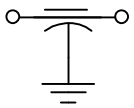

MARKING:
PART: SCI 54-844-002

BUBBLE
PACK: SCI 54-844-002
DATE CODE
LOT NO.
QTY./PACK (25 PCS.)

16

RoHS compliant

NOTES:
1. HARDWARE SUPPLIED.
2. DIELECTRIC WITHSTAND VOLTAGE: 1500VAC
3. MAX. MOUNTING TORQUE: 8lbs-in.

REV. NO.	CHANGE NOTICE
16	CN 69683-ENG
15	CN 212779
14	CN 202139
13	CN 187805
12	CN 184928

TOLERANCES UNLESS OTHERWISE SPECIFIED
Fractions ± 1/64
Dec. .xx±
Dec. .xxx± .010
Angles ±0° 30′
CODE IDENT. NO. OLSP2

api technologies corp.
FAIRVIEW PENNSYLVANIA

Dwn. SLAGLE
Date 7-29-13
Engr. B. DEVINE
Scale NONE

Description
LOW PASS EMI FILTER

54-844-002