Chipsmall Limited consists of a professional team with an average of over 10 year of expertise in the distribution of electronic components. Based in Hongkong, we have already established firm and mutual-benefit business relationships with customers from,Europe,America and south Asia,supplying obsolete and hard-to-find components to meet their specific needs.

With the principle of “Quality Parts,Customers Priority,Honest Operation,and Considerate Service”,our business mainly focus on the distribution of electronic components. Line cards we deal with include Microchip,ALPS,ROHM,Xilinx,Pulse,ON,Everlight and Freescale. Main products comprise IC,Modules,Potentiometer,IC Socket,Relay,Connector.Our parts cover such applications as commercial,industrial, and automotives areas.

We are looking forward to setting up business relationship with you and hope to provide you with the best service and solution. Let us make a better world for our industry!

Contact us

Tel: +86-755-8981 8866 Fax: +86-755-8427 6832
Email & Skype: info@chipsmall.com Web: www.chipsmall.com
Address: A1208, Overseas Decoration Building, #122 Zhenhua RD., Futian, Shenzhen, China

THIS DRAWING IS UNPUBLISHED. RELEASED FOR PUBLICATION -,- .
© COPYRIGHT - By - ALL RIGHTS RESERVED.

LOC	DIST
AA	22

REVISIONS

P	LTR	DESCRIPTION	DATE	DWN	APVD
	D	ECR-11-024835	20FEB2012	JJ	AC

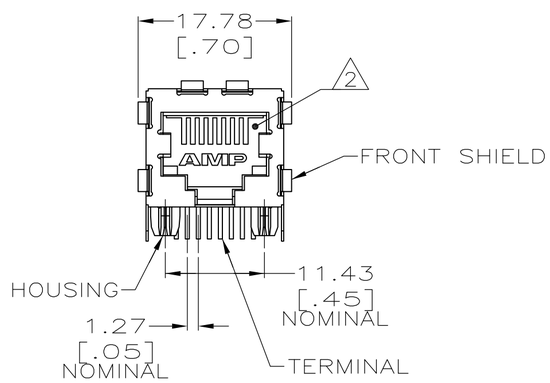

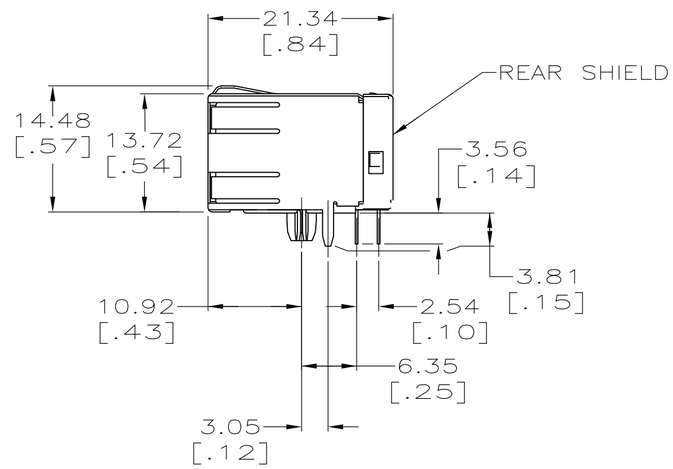

1. MATERIAL: HOUSING – NYLON, BLACK, IR REFLOW COMPATIBLE, UL 94V–0.
   TERMINALS – 0.33 [.013] THICK PHOS BRONZE PLATED WITH 1.27 µm [.000050] MINIMUM THICK HARD GOLD IN LOCALIZED AREA AND 3.81 µm [.000150] MINIMUM THICK MATTE TIN IN SOLDER AREA OVER 1.27 µm [.000050] MINIMUM THICK NICKEL UNDERPLATE.
   SHIELDS – 0.25 [.010] THICK COPPER ALLOY PLATED WITH 2.03 µm [.000080] MINIMUM BRIGHT TIN OVER 1.27 µm [.000050] MINIMUM NICKEL
2. JACK CAVITY CONFORMS TO FCC RULES AND REGULATIONS, PART 68 SUBPART F.
3. USE #30 DRILL BIT OR 3.25mm DRILL BIT WHEN PRODUCING THESE PCB HOLES.
4. MATERIAL: HOUSING – NYLON, BLACK, IR REFLOW COMPATIBLE, UL 94V–0.
   TERMINALS – 0.33 [.013] THICK PHOS BRONZE PLATED WITH 1.27 µm [.000050] MINIMUM THICK HARD GOLD IN LOCALIZED AREA AND 3.81 µm [.000150] MINIMUM THICK MATTE TIN IN SOLDER AREA OVER 1.27 µm [.000050] MINIMUM THICK NICKEL UNDERPLATE.
   SHIELDS – 0.25 [.010] THICK COPPER ALLOY PLATED WITH 1.27 µm [.000050] MINIMUM NICKEL AND 2.03 µm [.000080] MINIMUM HOT TIN DIP ON PCB GROUND TABS.

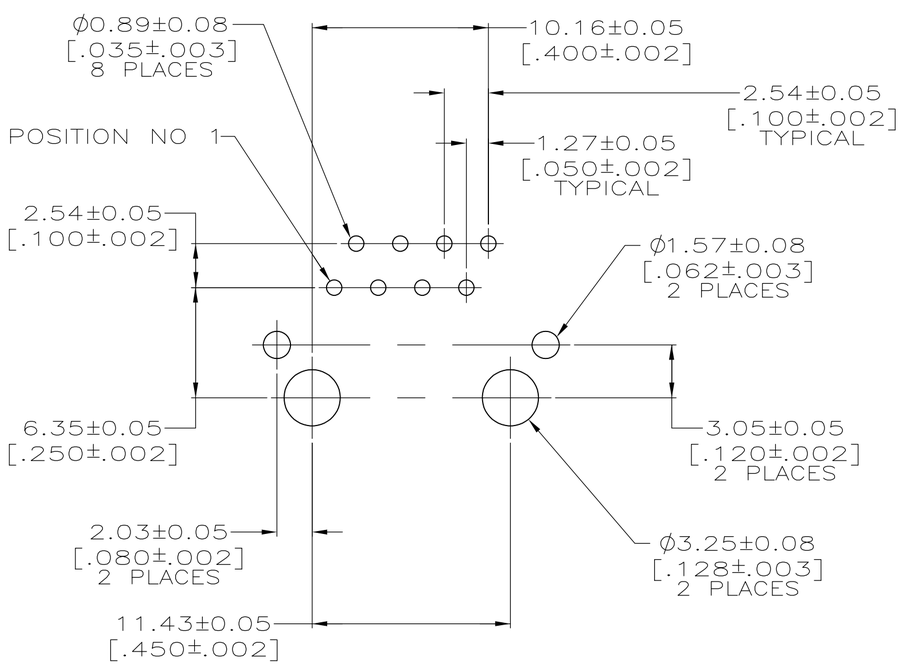

SUGGESTED PC BOARD LAYOUT
COMPONENT SIDE
SCALE 4:1

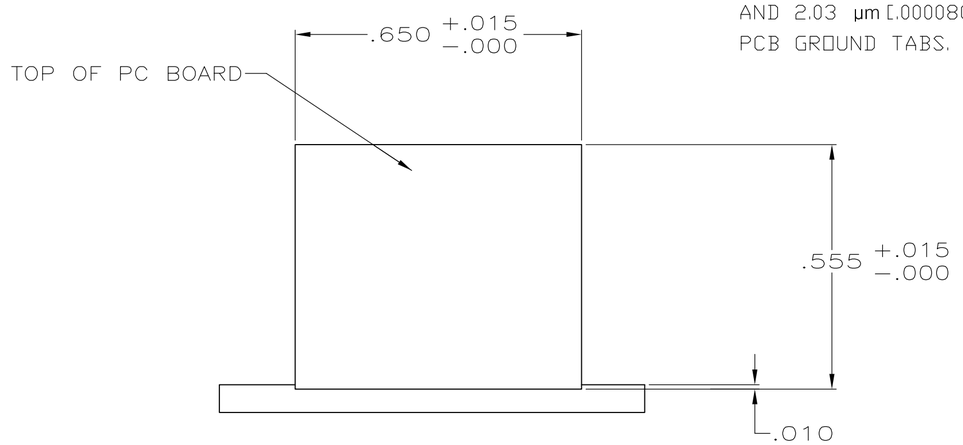

SUGGESTED PANEL CUTOUT
SCALE 4:1

	4	5406298–2
SUPERSEDED BY -2	1	~~5406298–~~1
	REMARK	PART NUMBER

THIS DRAWING IS A CONTROLLED DOCUMENT.

DIMENSIONS: mm

TOLERANCES UNLESS OTHERWISE SPECIFIED:
0 PLC ± –
1 PLC ± –
2 PLC ± 0.25[.01]
3 PLC ± 0.13[.005]
4 PLC ± –
ANGLES ± –

MATERIAL: SEE NOTE 1&4
FINISH: SEE NOTE 1&4

DWN 20APR2005 T. SPRINKLE/L.A.MAYER
CHK 20APR2005 J.WESTMAN
APVD 20APR2005 S.FLICKINGER
PRODUCT SPEC 108–1163
APPLICATION SPEC 114–2048
WEIGHT –

TE Connectivity

NAME: MODULAR JACK ASSEMBLY, SINGLE PORT, 8 POSITION, SHIELDED, REVERSE PANEL GROUND TABS, CATEGORY 4

SIZE A2 | CAGE CODE 00779 | DRAWING NO C-5406298 | RESTRICTED TO –

CUSTOMER DRAWING | SCALE 2:1 | SHEET 1 OF 1 | REV D

5406298