Chipsmall Limited consists of a professional team with an average of over 10 year of expertise in the distribution of electronic components. Based in Hongkong, we have already established firm and mutual-benefit business relationships with customers from,Europe,America and south Asia,supplying obsolete and hard-to-find components to meet their specific needs.

With the principle of “Quality Parts,Customers Priority,Honest Operation,and Considerate Service”,our business mainly focus on the distribution of electronic components. Line cards we deal with include Microchip,ALPS,ROHM,Xilinx,Pulse,ON,Everlight and Freescale. Main products comprise IC,Modules,Potentiometer,IC Socket,Relay,Connector.Our parts cover such applications as commercial,industrial, and automotives areas.

We are looking forward to setting up business relationship with you and hope to provide you with the best service and solution. Let us make a better world for our industry!

Contact us

Tel: +86-755-8981 8866 Fax: +86-755-8427 6832
Email & Skype: info@chipsmall.com Web: www.chipsmall.com
Address: A1208, Overseas Decoration Building, #122 Zhenhua RD., Futian, Shenzhen, China

THIS DRAWING IS UNPUBLISHED. RELEASED FOR PUBLICATION - ,- .
© COPYRIGHT - By - ALL RIGHTS RESERVED.

LOC	DIST
AA	00

REVISIONS

P	LTR	DESCRIPTION	DATE	DWN	APVD
	D1	REVISED PER ECO-11-004835	11MAR11	RK	HMR

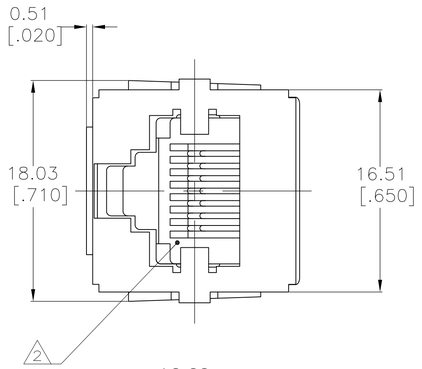

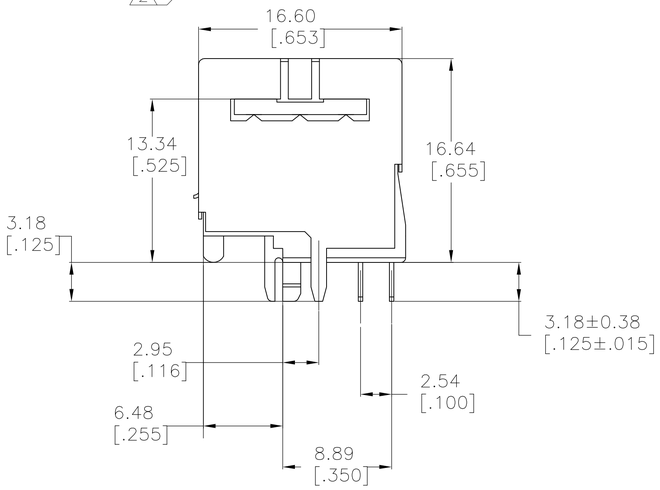

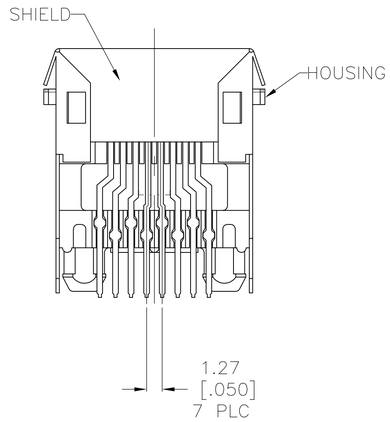

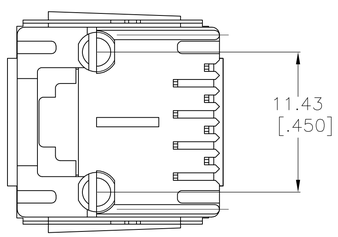

1. MATERIAL:
   HOUSING – POLYESTER MOLDING COMPOUND, COLOR: BLACK
   TERMINALS – 0.35[.0138] THICK PHOS BRONZE PLATED WITH 1.27µm[.000050] MIN THICK GOLD IN LOCALIZED AREA AND 3.81µm[.000150] MIN THICK MATTE TIN IN SOLDER AREA OVER 1.27µm[.000050] MIN THICK NICKEL UNDERPLATE
   SHIELD – COPPER ZINC ALLOY PLATED WITH 3.0µm [.000120] MIN THICK REFLOWED TIN.

2. CAVITY CONFORMS TO FCC RULES AND REGULATIONS PART 68 AND REA BULLETIN 345-81, PE-76 SPECIFICATION FOR MODULAR TELEPHONE HARDWARE.

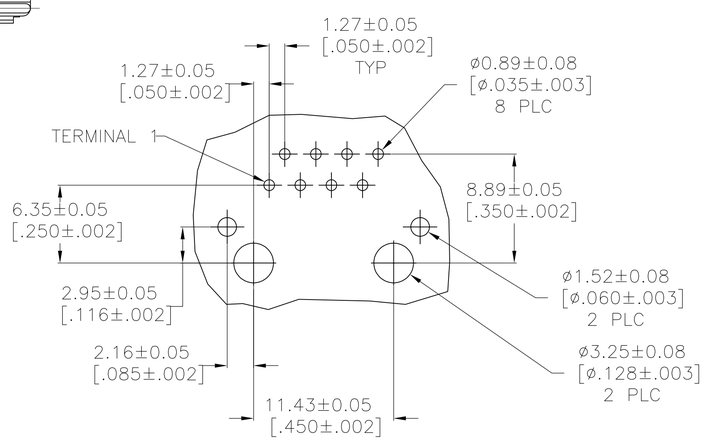

RECOMMENDED PRINTED CIRCUIT BOARD LAYOUT
COMPONENT SIDE SHOWN

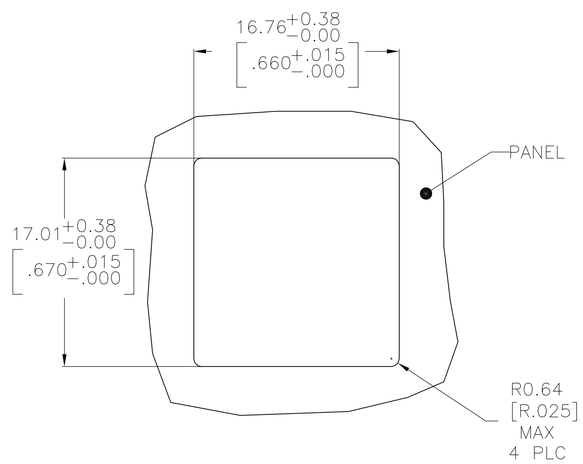

RECOMMENDED PANEL CUTOUT

5406436-1
PART NO.

THIS DRAWING IS A CONTROLLED DOCUMENT.

DIMENSIONS: mm [INCHES]

TOLERANCES UNLESS OTHERWISE SPECIFIED:
0 PLC ± –
1 PLC ± –
2 PLC ± 0.13[.005]
3 PLC ± –
4 PLC ± –
ANGLES ± –

MATERIAL: SEE NOTE 1
FINISH: SEE NOTE 1

DWN 09JUN2005 J. ALCORTA – DOCK5
CHK 09JUN2005 J. WESTMAN
APVD 09JUN2005 S. FLICKINGER
PRODUCT SPEC 108-1163
APPLICATION SPEC 114-2048
WEIGHT –

TE Connectivity

NAME: MODULAR JACK ASSEMBY, TOP ENTRY, 8 POSITION, SHIELDED, WITH PANEL STOPS PRINTED CIRCUIT BOARD AND PANEL GROUNDS

SIZE	CAGE CODE	DRAWING NO	RESTRICTED TO
A1	00779	C-5406436	–

CUSTOMER DRAWING
SCALE 4:1 SHEET 1 OF 1 REV D1

4805 (3/11)