Chipsmall Limited consists of a professional team with an average of over 10 year of expertise in the distribution of electronic components. Based in Hongkong, we have already established firm and mutual-benefit business relationships with customers from,Europe,America and south Asia,supplying obsolete and hard-to-find components to meet their specific needs.

With the principle of “Quality Parts,Customers Priority,Honest Operation,and Considerate Service”,our business mainly focus on the distribution of electronic components. Line cards we deal with include Microchip,ALPS,ROHM,Xilinx,Pulse,ON,Everlight and Freescale. Main products comprise IC,Modules,Potentiometer,IC Socket,Relay,Connector.Our parts cover such applications as commercial,industrial, and automotives areas.

We are looking forward to setting up business relationship with you and hope to provide you with the best service and solution. Let us make a better world for our industry!

Contact us

Tel: +86-755-8981 8866 Fax: +86-755-8427 6832
Email & Skype: info@chipsmall.com Web: www.chipsmall.com
Address: A1208, Overseas Decoration Building, #122 Zhenhua RD., Futian, Shenzhen, China

THIS DRAWING IS UNPUBLISHED. RELEASED FOR PUBLICATION 20
© COPYRIGHT 20 - ALL RIGHTS RESERVED.

LOC	DIST
AA	22

REVISIONS

P	LTR	DESCRIPTION	DATE	DWN	APVD
	B1	REVISED PER ECO-11-005027	21MAY2011	RK	HMR

1. MATERIAL: HOUSING - HIGH TEMPERATURE THERMOPLASTIC, COLOR - GRAY
TERMINALS - 0.3[.012] THICK COPPER ALLOY PLATED WITH 1.27µm[.000050] MINIMUM GOLD IN LOCALIZED GOLD PLATE AREA, 2.5 µm[.000100] MINIMUM MATTE TIN ON TERMINATION END, BOTH OVER 1.27µm[.000050] MINIMUM NICKEL OVER ENTIRE TERMINAL.
BOARDLOCK - PHOS BRONZE, 1/2 HARD, 3.81µm[.000150] MINIMUM MATTE TIN OVER 1.27µm[.000050] MINIMUM NICKEL ON TERMINAL END.

2. JACK CAVITY CONFORMS TO FCC 47 RULES AND REGULATIONS, PART 68 SUBPART F.

3. DATUM ESTABLISHED BY CUSTOMER.

4. PACKAGING TAPE AND REEL: (PER EIA 481 SPEC)
32mm WIDE TAPE
24mm POCKET PITCH
560mm REEL DIA
600 PIECES PER REEL

5. PACKAGING TAPE AND REEL: (PER EIA 481 SPEC)
32mm WIDE TAPE
24mm POCKET PITCH
330mm REEL DIA
200 PIECES PER REEL

6. CONNECTOR SHOULD BE POSITIONED THROUGH PANEL CUTOUT AS SHOWN TO SUPPORT TOP OF MODULAR JACK FOR STRAIN RELIEF

7. MANUFACTURING DATE CODE LOCATED APPROXIMATELY AS SHOWN. FIRST 2 DIGITS ARE YEAR, SECOND 2 DIGITS ARE WORK WEEK, AND LAST DIGIT IS THE DAY OF THE WEEK

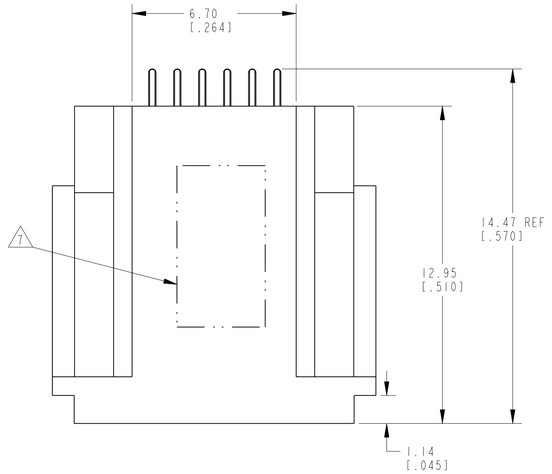

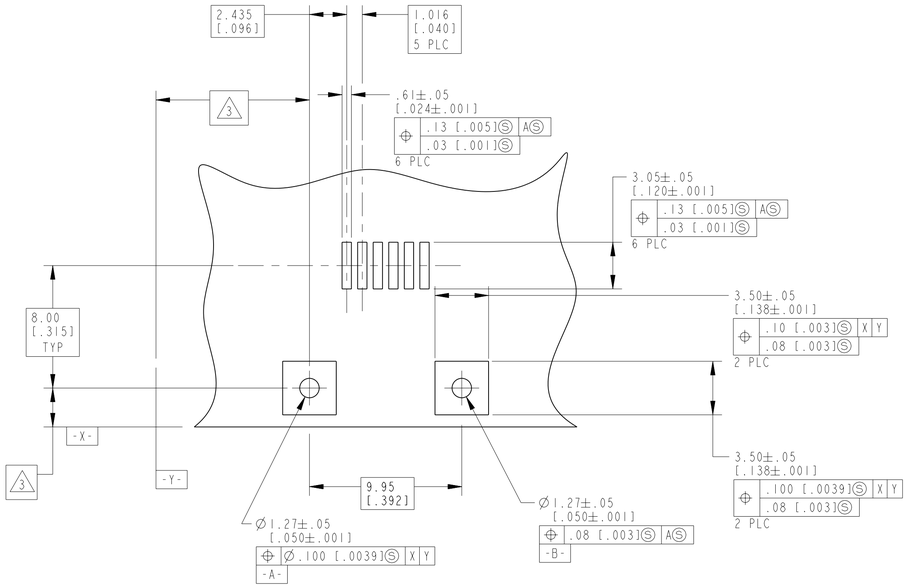

RECOMMENDED PRINTED CIRCUIT BOARD LAYOUT
COMPONENT SIDE
SCALE 5:1

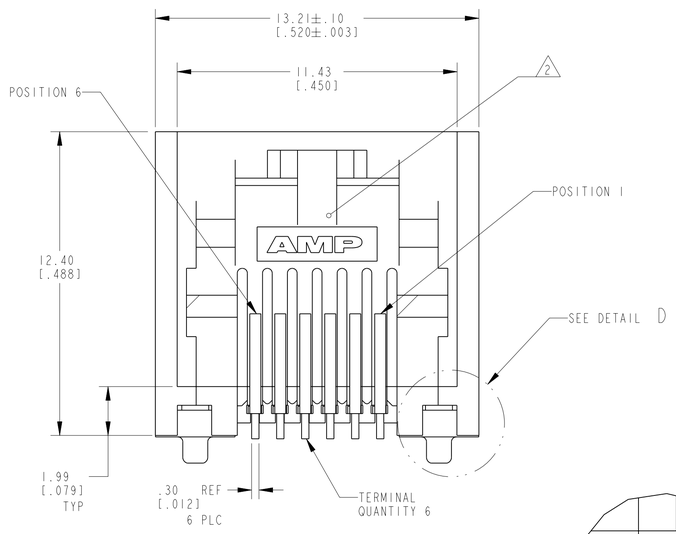

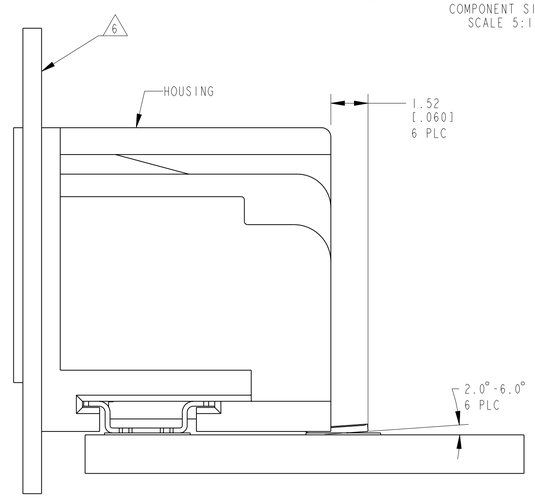

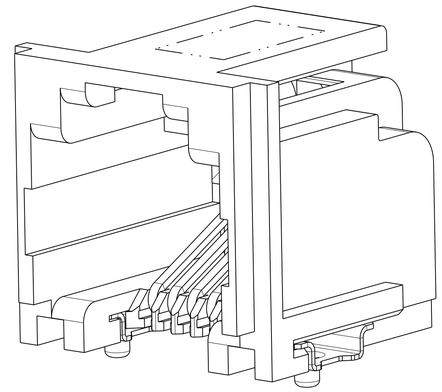

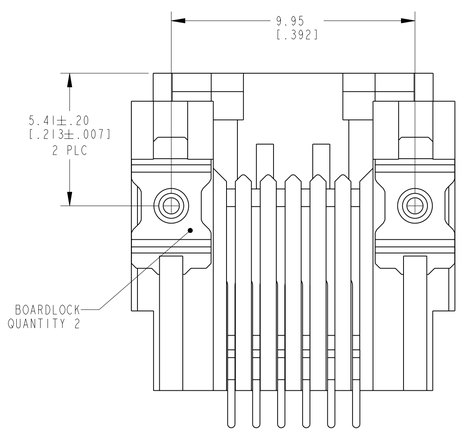

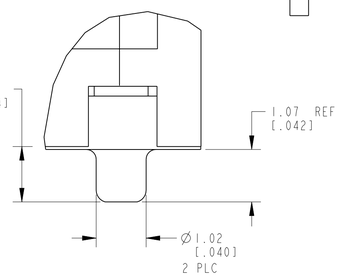

DETAIL D
SCALE 16:1

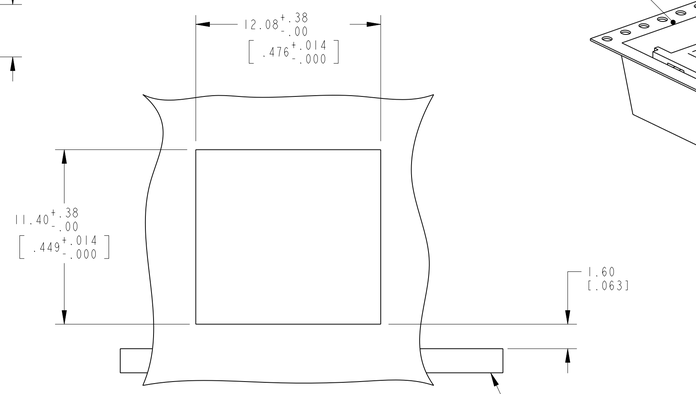

RECOMMENDED PANEL CUTOUT
SCALE 5:1

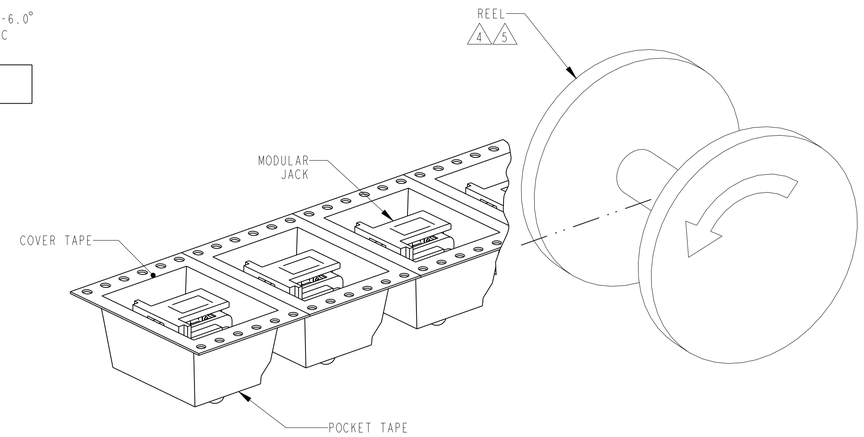

NONE	5	5406514-3
7	5	5406514-2
7	4	5406514-1
MARKING	PACKAGING	PART NUMBER

THIS DRAWING IS A CONTROLLED DOCUMENT.

DIMENSIONS: mm[INCHES]

TOLERANCES UNLESS OTHERWISE SPECIFIED:
0 PLC ±-
1 PLC ±-
2 PLC ±-
3 PLC ±0.13[.005]
4 PLC ±-
ANGLES ±1

MATERIAL: SEE NOTE 1
FINISH: SEE NOTE 1

DWN G. ATTADIA 28JUL2005
CHK J. WESTMAN 28JUL2005
APVD S. FLICKINGER 28JUL2005
PRODUCT SPEC 108-1689
APPLICATION SPEC 114-6040
WEIGHT .95 GRAMS

TE Connectivity

NAME: MODULAR JACK ASSEMBLY, 6/6 POSITION, SURFACE MOUNT, RIGHT ANGLE, WITH INWARD BOARDLOCKS

SIZE A1 | CAGE CODE 00779 | DRAWING NO C-5406514 | RESTRICTED TO -

CUSTOMER DRAWING | SCALE 8:1 | SHEET 1 OF 1 | REV B1

4805 (3/11)

Pro/ENGINEER DRAWING