Chipsmall Limited consists of a professional team with an average of over 10 year of expertise in the distribution of electronic components. Based in Hongkong, we have already established firm and mutual-benefit business relationships with customers from,Europe,America and south Asia,supplying obsolete and hard-to-find components to meet their specific needs.

With the principle of “Quality Parts,Customers Priority,Honest Operation,and Considerate Service”,our business mainly focus on the distribution of electronic components. Line cards we deal with include Microchip,ALPS,ROHM,Xilinx,Pulse,ON,Everlight and Freescale. Main products comprise IC,Modules,Potentiometer,IC Socket,Relay,Connector.Our parts cover such applications as commercial,industrial, and automotives areas.

We are looking forward to setting up business relationship with you and hope to provide you with the best service and solution. Let us make a better world for our industry!

# Contact us

Tel: +86-755-8981 8866 Fax: +86-755-8427 6832
Email & Skype: info@chipsmall.com Web: www.chipsmall.com
Address: A1208, Overseas Decoration Building, #122 Zhenhua RD., Futian, Shenzhen, China

THIS DRAWING IS UNPUBLISHED. RELEASED FOR PUBLICATION -.- .
© COPYRIGHT - BY TYCO ELECTRONICS CORPORATION. ALL RIGHTS RESERVED.

| LOC | DIST |
|---|---|
| AA | 00 |

REVISIONS

| P | LTR | DESCRIPTION | DATE | DWN | APVD |
|---|---|---|---|---|---|
| | C | REV PER ECR-08-032447 | 19FEB2009 | DZ | SY |

1. MATERIAL:
   HOUSING – NYLON, COLOR: BLACK, UL 94V-0.
   OVERMOLDED TERMINAL ARRAY – PBT, BROWN.
   TERMINALS – 0.33 [.013] THICK PHOS BRONZE PLATED WITH 1.27µm [.000050] THICK HARD GOLD IN LOCALIZED AREA AND 3.81µm [.000150] THICK MATTE TIN IN SOLDER AREA OVER 1.27µm [.000050] THICK NICKEL UNDERPLATE.
   SHIELD – 0.254 [.010] THICK COPPER ALLOY PLATED WITH 1.27µm [.000050] MINIMUM NICKEL AND 2.03µm [.000080] MINIMUM HOT TIN DIP ON PCB GROUND TABS.

2. JACK CAVITY COMFORMS TO FCC RULES AND REGULATIONS, PART 68 SUBPART F.

3. THIS HOLE REQUIRED FOR –2 ONLY.

4. REAR GROUND TAB NOT REQUIRED FOR –1.

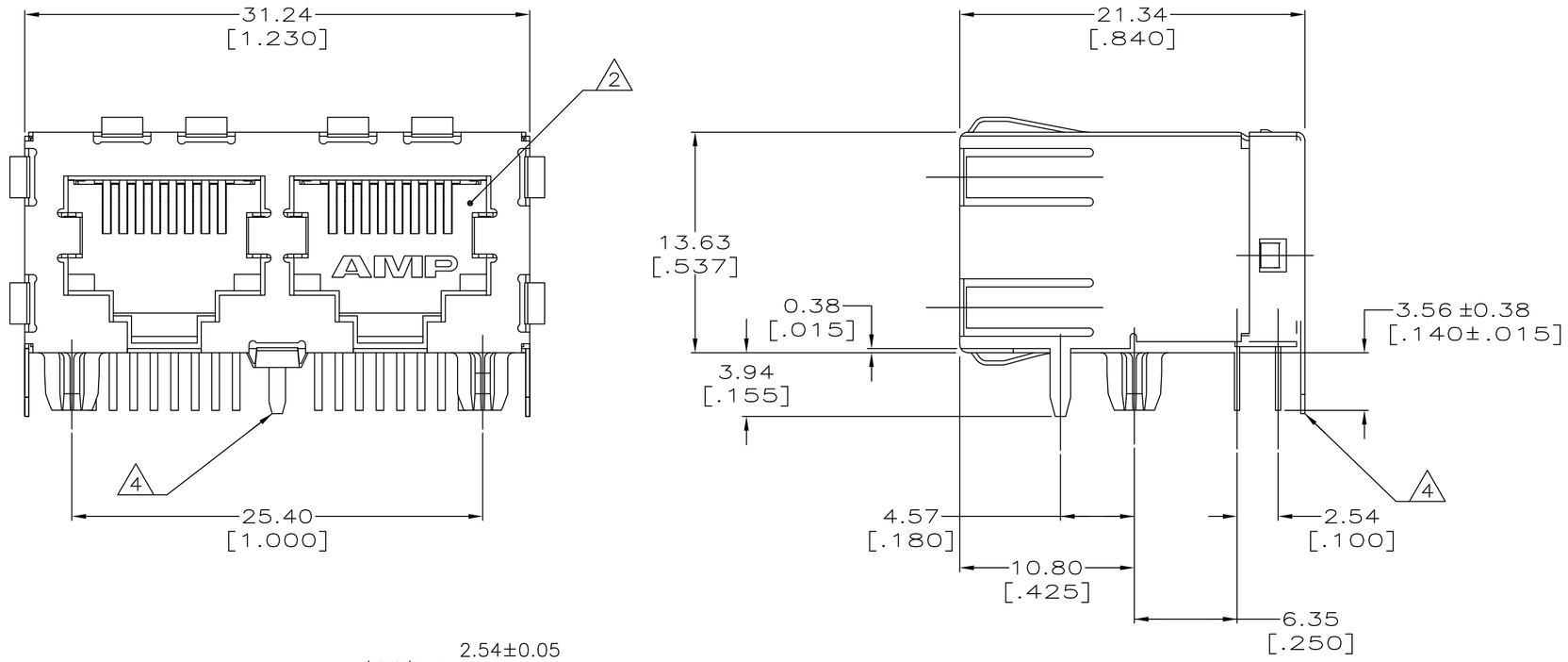


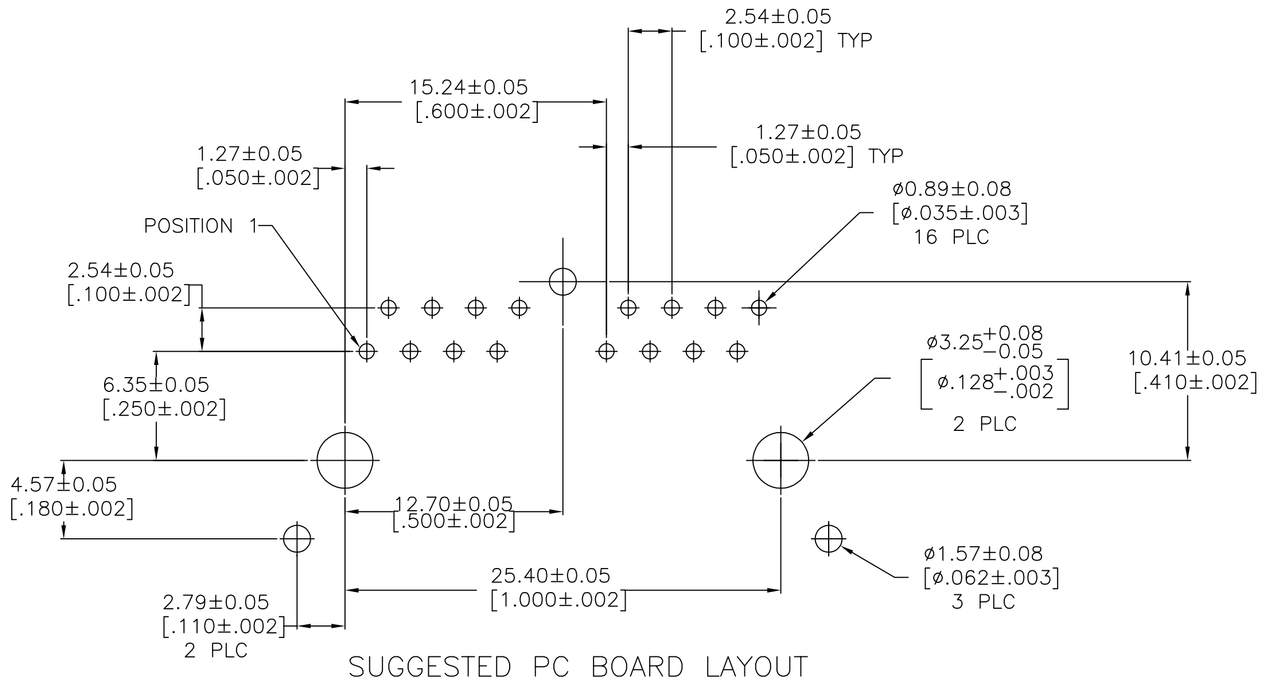


SUGGESTED PC BOARD LAYOUT
COMPONENT SIDE
SEE APPLICATION SPECIFICATION

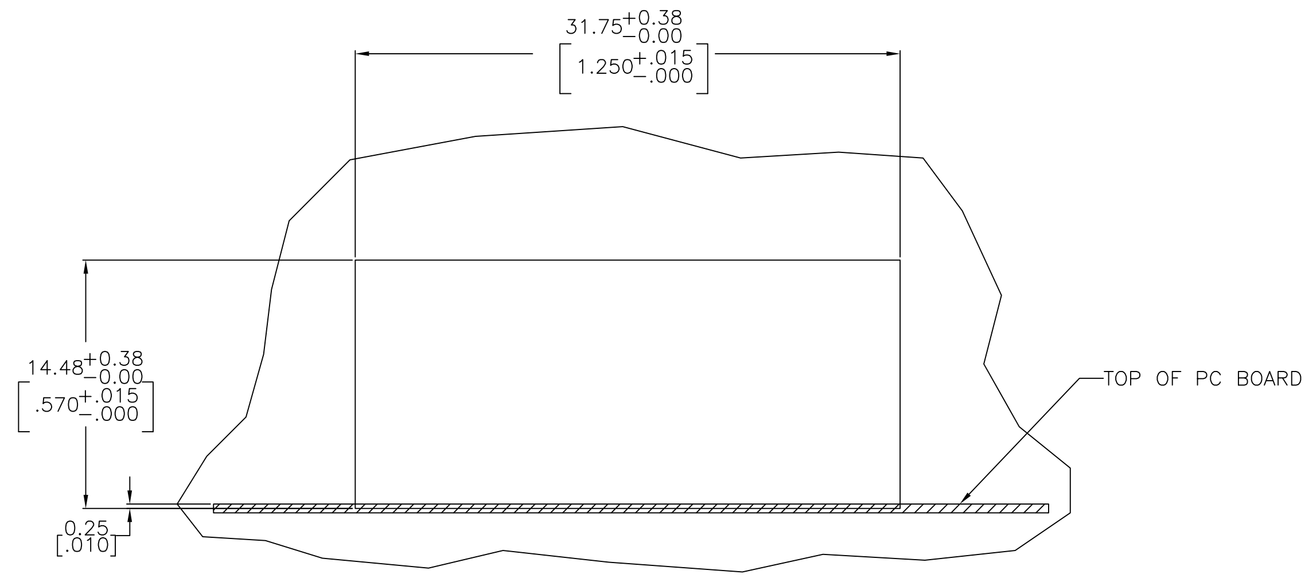


SUGGESTED PANEL CUTOUT

| | |
|---|---|
| WITH REAR PCB GROUND TAB | 5406566–2 |
| WITH OUT REAR PCB GROUND TAB | 5406566–1 |
| DESCRIPTION | PART NO. |

THIS DRAWING IS A CONTROLLED DOCUMENT.

DIMENSIONS: mm [INCHES]

TOLERANCES UNLESS OTHERWISE SPECIFIED:
0 PLC ± –
1 PLC ± –
2 PLC ± 0.25[.01]
3 PLC ± 0.13[.005]
4 PLC ± –
ANGLES ± –

MATERIAL: SEE NOTE 1
FINISH: SEE NOTE 1

DWN J. ALCORTA – DOCK5 16JUN2005
CHK J. WESTMAN 16JUN2005
APVD S. FLICKINGER 16JUN2005
PRODUCT SPEC 108–1163–2
APPLICATION SPEC 114–2048
WEIGHT –

Tyco Electronics
Tyco Electronics Corporation
Harrisburg, PA 17105–3608

NAME: MODULAR JACK ASSEMBLY, 2 PORT, 8 POSITION, RIGHT ANGLE, SHIELDED, CAT 5

| SIZE | CAGE CODE | DRAWING NO | RESTRICTED TO |
|---|---|---|---|
| A1 | 00779 | C–5406566 | – |

CUSTOMER DRAWING | SCALE 4:1 | SHEET 1 OF 1 | REV C