Chipsmall Limited consists of a professional team with an average of over 10 year of expertise in the distribution of electronic components. Based in Hongkong, we have already established firm and mutual-benefit business relationships with customers from,Europe,America and south Asia,supplying obsolete and hard-to-find components to meet their specific needs.

With the principle of “Quality Parts,Customers Priority,Honest Operation,and Considerate Service”,our business mainly focus on the distribution of electronic components. Line cards we deal with include Microchip,ALPS,ROHM,Xilinx,Pulse,ON,Everlight and Freescale. Main products comprise IC,Modules,Potentiometer,IC Socket,Relay,Connector.Our parts cover such applications as commercial,industrial, and automotives areas.

We are looking forward to setting up business relationship with you and hope to provide you with the best service and solution. Let us make a better world for our industry!

Contact us

Tel: +86-755-8981 8866 Fax: +86-755-8427 6832
Email & Skype: info@chipsmall.com Web: www.chipsmall.com
Address: A1208, Overseas Decoration Building, #122 Zhenhua RD., Futian, Shenzhen, China

THIS DRAWING IS UNPUBLISHED. RELEASED FOR PUBLICATION -,- .
© COPYRIGHT – TE Connectivity ALL RIGHTS RESERVED.

REVISIONS					
P	LTR	DESCRIPTION	DATE	DWN	APVD
	A1	REV PER ECR 17-004509	27APR2017	AS	RS

⚠1 USE WITH PRO-CRIMPER 354940-1.

2. SEE INSTRUCTION SHEET 408-9765.

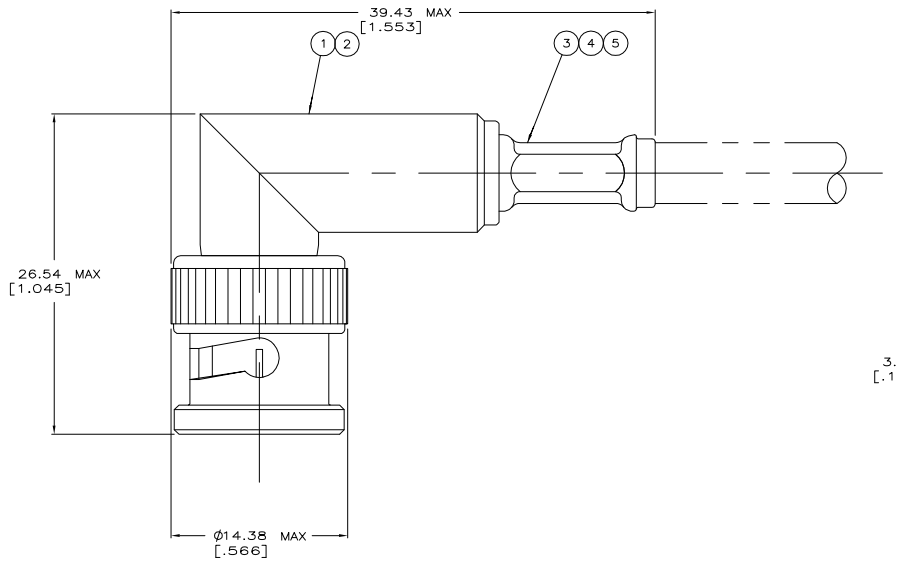

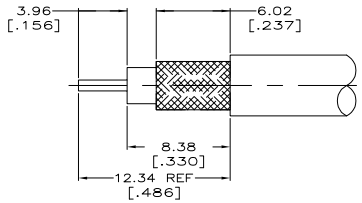

RECOMMENDED STRIP LENGTH

	FOR USE WITH CABLE	CONTACT CRIMP (SQUARE)	FERRULE CRIMP (HEX)	DIE SET ⚠1	(5) TUBING, PLASTIC QTY=1	(4) TUBING, METAL QTY=1	(3) FERRULE QTY=1	(2) CONTACT QTY=1	(1) PLUG ASSY QTY=1	PART NUMBER
OBSOLETE	AT&T 735A	1.07 [.042]	4.52 [.178]	58425-2	–	–	9-413658-2	1-413746-0	413947-2	1-5413588-0
OBSOLETE	RG-59 TYPE WITH .031 DIA CENTER CONDUCTOR,BELDEN 9240,9259 & 9266	1.07 [.042]	6.48 [.255]	58425-1	–	–	9-221132-1	2-413746-0	413947-1	5413588-9
OBSOLETE	RG-179/U,179A/U,179B/U,187/U & 187A/U	1.07 [.042]	4.52 [.178]	58425-2	227194-2	1-222001-0	9-413658-0	1-413746-5	413947-2	5413588-8
OBSOLETE	AT&T KS 19224 L2	1.07 [.042]	4.52 [.178]	58425-2	227194-2	1-222001-0	9-413658-2	1-413746-5	413947-2	5413588-4
OBSOLETE	RG-59/U,59A/U & 59B/U	1.07 [.042]	6.48 [.255]	58425-1	–	–	9-221132-1	413746-5	413947-1	5413588-2

THIS DRAWING IS A CONTROLLED DOCUMENT.

DIMENSIONS: mm [INCHES]

TOLERANCES UNLESS OTHERWISE SPECIFIED:
0 PLC ± –
1 PLC ± –
2 PLC ± –
3 PLC ± 0.41 [.016]
4 PLC ± –
ANGLES ± –

MATERIAL –
FINISH –

DWN J. HAVENER 12AUG2005
CHK J. HAVENER 12AUG2005
APVD J. LIPPERT 12AUG2005

PRODUCT SPEC –
APPLICATION SPEC –
WEIGHT 0.000000

TE Connectivity

NAME PLUG, RIGHT ANGLE, HEX CRIMP, 75 OHM,BNC

SIZE	CAGE CODE	DRAWING NO	RESTRICTED TO
A1	00779	C-5413588	–

CUSTOMER DRAWING | SCALE 5:1 | SHEET 1 OF 1 | REV A1

4805 (1/15)