Chipsmall Limited consists of a professional team with an average of over 10 year of expertise in the distribution of electronic components. Based in Hongkong, we have already established firm and mutual-benefit business relationships with customers from,Europe,America and south Asia,supplying obsolete and hard-to-find components to meet their specific needs.

With the principle of “Quality Parts,Customers Priority,Honest Operation,and Considerate Service”,our business mainly focus on the distribution of electronic components. Line cards we deal with include Microchip,ALPS,ROHM,Xilinx,Pulse,ON,Everlight and Freescale. Main products comprise IC,Modules,Potentiometer,IC Socket,Relay,Connector.Our parts cover such applications as commercial,industrial, and automotives areas.

We are looking forward to setting up business relationship with you and hope to provide you with the best service and solution. Let us make a better world for our industry!

Contact us

Tel: +86-755-8981 8866 Fax: +86-755-8427 6832
Email & Skype: info@chipsmall.com Web: www.chipsmall.com
Address: A1208, Overseas Decoration Building, #122 Zhenhua RD., Futian, Shenzhen, China

THIS DRAWING IS UNPUBLISHED. RELEASED FOR PUBLICATION ,19 .
© COPYRIGHT 19 BY AMP INCORPORATED. ALL RIGHTS RESERVED.

LOC	DIST
AA	20

REVISIONS

P	LTR	DESCRIPTION	DATE	DWN	APVD
	J	REVISED PER EC 0515-0411-02	25NOV02	DD	RM

1. MATERIAL: METRIC MOUNTING STUD - BLACK OXIDE COATED CARBON STEEL.
WASHER, LOCKWASHER AND HEX NUT - ZINC PLATED STEEL.

2. ALL HARDWARE SHIPPED UNASSEMBLED.

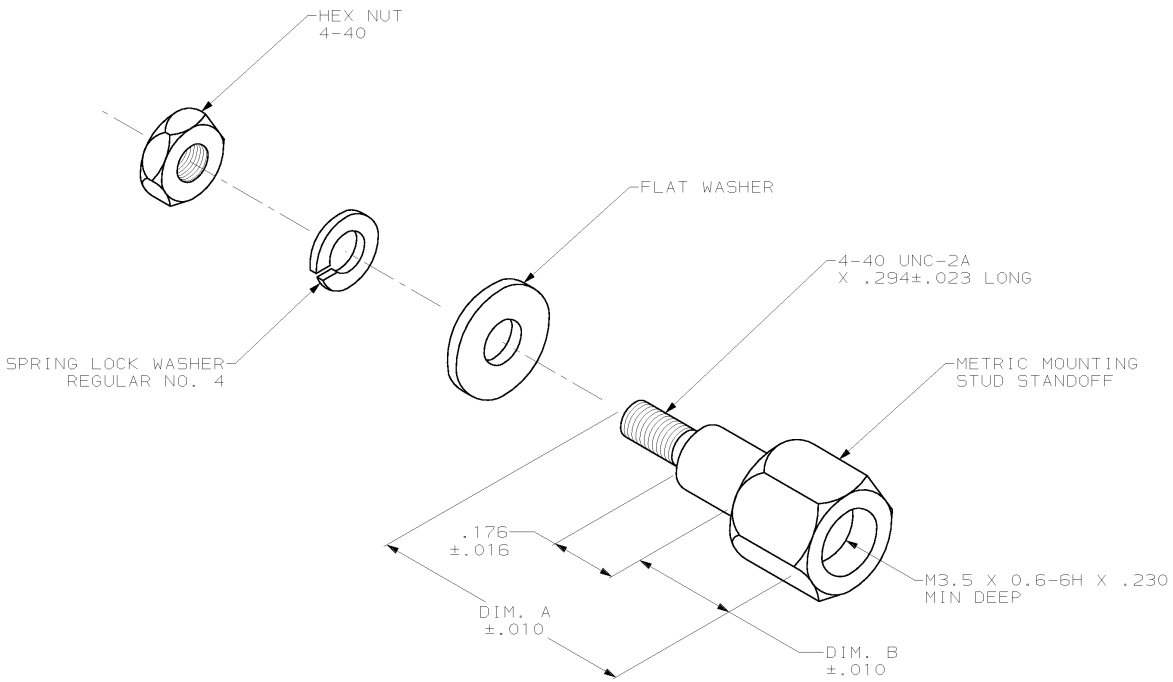

DIM. B	DIM. A	PART NUMBER
.193	.688	553636-3
.256	.750	553636-2

THIS DRAWING IS A CONTROLLED DOCUMENT.

DIMENSIONS: INCHES

TOLERANCES UNLESS OTHERWISE SPECIFIED:
0 PLC ±-
1 PLC ±-
2 PLC ±-
3 PLC ±-
4 PLC ±-
ANGLES ±-

MATERIAL 1 FINISH 1

DWN A. HOLT 19-NOV-81
CHK M. FRIEL 25-NOV-81
APVD S. HEGE 07-DEC-81
PRODUCT SPEC –
APPLICATION SPEC –
WEIGHT –

CUSTOMER DRAWING

AMP TYCO Electronics Harrisburg, PA 17105-3608

NAME HARDWARE KIT, SHIELDED, CHAMP LATCH

SIZE	CAGE CODE	DRAWING NO	RESTRICTED TO
A2	00779	C-553636	–

SCALE 4:1 SHEET 1 OF 1 REV J

553636

AMP 1471-9 REV 11JUN97