Chipsmall Limited consists of a professional team with an average of over 10 year of expertise in the distribution of electronic components. Based in Hongkong, we have already established firm and mutual-benefit business relationships with customers from,Europe,America and south Asia,supplying obsolete and hard-to-find components to meet their specific needs.

With the principle of “Quality Parts,Customers Priority,Honest Operation,and Considerate Service”,our business mainly focus on the distribution of electronic components. Line cards we deal with include Microchip,ALPS,ROHM,Xilinx,Pulse,ON,Everlight and Freescale. Main products comprise IC,Modules,Potentiometer,IC Socket,Relay,Connector.Our parts cover such applications as commercial,industrial, and automotives areas.

We are looking forward to setting up business relationship with you and hope to provide you with the best service and solution. Let us make a better world for our industry!

Contact us

Tel: +86-755-8981 8866 Fax: +86-755-8427 6832
Email & Skype: info@chipsmall.com Web: www.chipsmall.com
Address: A1208, Overseas Decoration Building, #122 Zhenhua RD., Futian, Shenzhen, China

THIS DRAWING IS UNPUBLISHED. RELEASED FOR PUBLICATION -,- .
© COPYRIGHT - By - ALL RIGHTS RESERVED.

LOC	DIST
AA	00

REVISIONS

P	LTR	DESCRIPTION	DATE	DWN	APVD
	B2	REVISED PER ECO-11-005033	29MAR11	RK	HMR

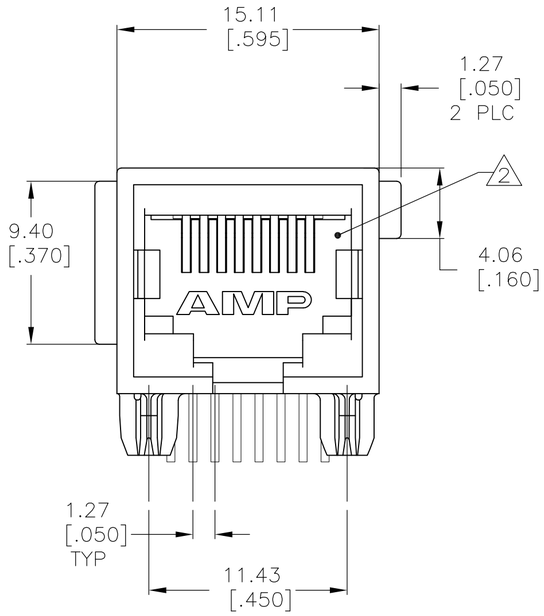

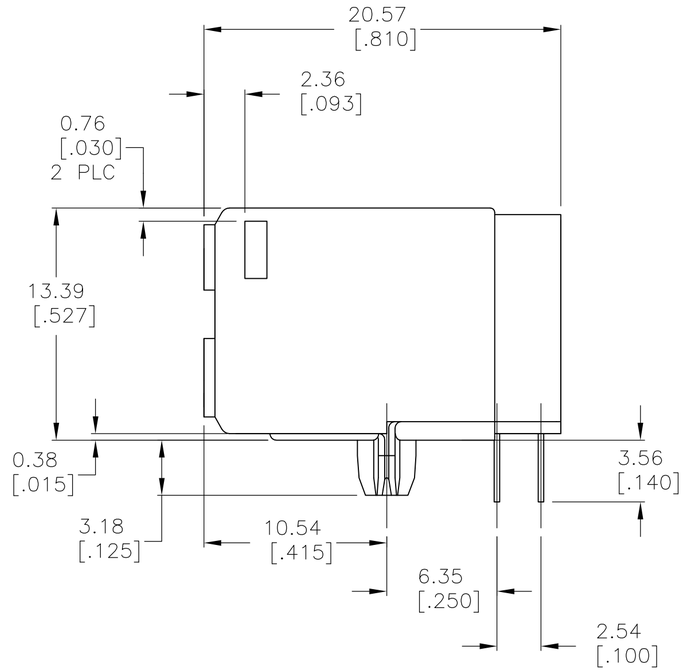

1. MATERIAL: HOUSING–HIGH TEMPERATURE NYLON, BLACK, UL 94V–O.
   TERMINALS – 0.33[.013] THICK PHOS BRONZE PLATED WITH 1.27μm[.000050] MINIMUM THICK HARD GOLD IN LOCALIZED AREA AND 3.81μm [.000150] MINIMUM THICK MATTE TIN IN SOLDER AREA OVER 1.27μm[.000050] MINIMUM THICK NICKEL UNDERPLATE.
2. JACK CAVITY CONFORMS TO FCC RULES AND REGULATIONS, PART 68 SUBPART F.
3. CAUTION: CATEGORY 5 JACK SOLDER TAIL POSITIONS DO NOT FOLLOW SAME NUMBER SEQUENCE AS THAT OF TRADITIONAL JACKS.
4. USE #30 DRILL BIT OR 3.25mm DRILL BIT WHEN PRODUCING THESE PCB HOLES.

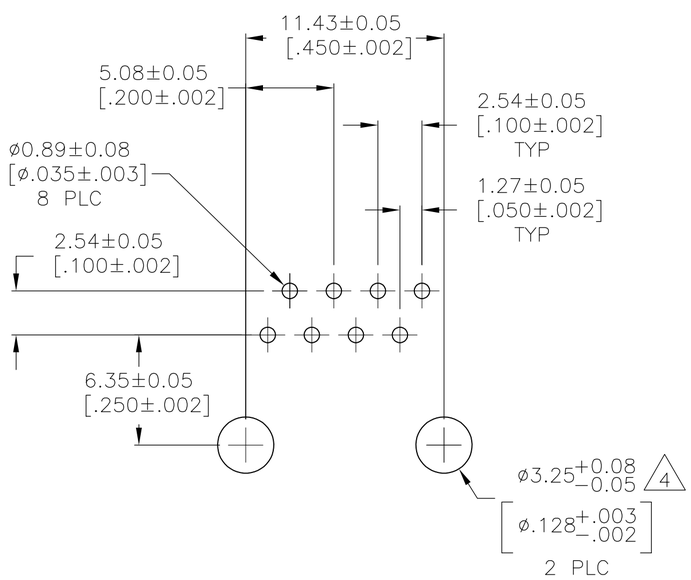

SUGGESTED PC BOARD LAYOUT
COMPONENT SIDE

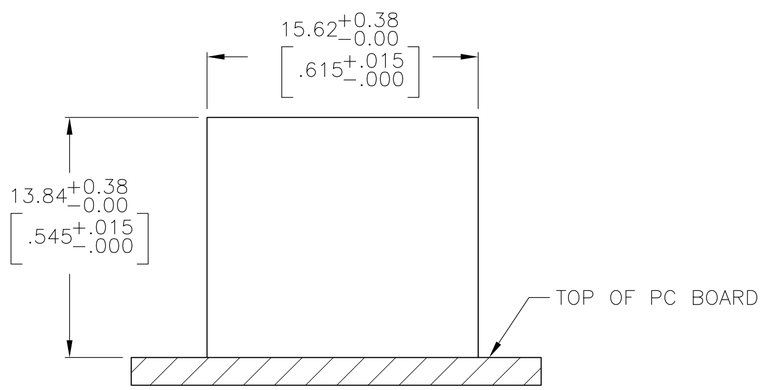

SUGGESTED PANEL CUTOUT
SCALE 2:1

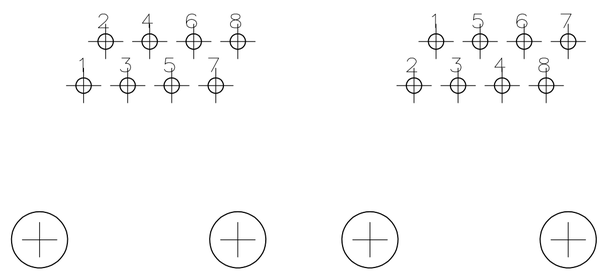

TRADITIONAL JACK 3 CATEGORY 5 JACK

5558343

THIS DRAWING IS A CONTROLLED DOCUMENT.	DWN B. LATTUCA 20SEPT05	TE Connectivity	5558343–1 PART NO.
DIMENSIONS: mm [INCHES]	CHK J. WESTMAN 20SEPT05		
TOLERANCES UNLESS OTHERWISE SPECIFIED: 0 PLC ± – ; 1 PLC ± – ; 2 PLC ± 0.25[.010] ; 3 PLC ± – ; 4 PLC ± – ; ANGLES ± –	APVD S. FLICKINGER 20SEPT05	NAME MODULAR JACK ASSEMBLY, 8 POSITION, RIGHT ANGLE, LOW PROFILE, CATEGORY 5, WITH PANEL STOPS	
	PRODUCT SPEC 108–1163		
	APPLICATION SPEC 114–2048	SIZE A2 / CAGE CODE 00779 / DRAWING NO C-5558343	RESTRICTED TO –
MATERIAL SEE NOTE 1 / FINISH SEE NOTE 1	WEIGHT –		
	CUSTOMER DRAWING	SCALE 4:1 / SHEET 1 OF 1	REV B2

1471–9 (3/11)