Chipsmall Limited consists of a professional team with an average of over 10 year of expertise in the distribution of electronic components. Based in Hongkong, we have already established firm and mutual-benefit business relationships with customers from,Europe,America and south Asia,supplying obsolete and hard-to-find components to meet their specific needs.

With the principle of “Quality Parts,Customers Priority,Honest Operation,and Considerate Service”,our business mainly focus on the distribution of electronic components. Line cards we deal with include Microchip,ALPS,ROHM,Xilinx,Pulse,ON,Everlight and Freescale. Main products comprise IC,Modules,Potentiometer,IC Socket,Relay,Connector.Our parts cover such applications as commercial,industrial, and automotives areas.

We are looking forward to setting up business relationship with you and hope to provide you with the best service and solution. Let us make a better world for our industry!

Contact us

Tel: +86-755-8981 8866 Fax: +86-755-8427 6832
Email & Skype: info@chipsmall.com Web: www.chipsmall.com
Address: A1208, Overseas Decoration Building, #122 Zhenhua RD., Futian, Shenzhen, China

THIS DRAWING IS UNPUBLISHED. RELEASED FOR PUBLICATION -,- .
© COPYRIGHT - BY TYCO ELECTRONICS CORPORATION. ALL RIGHTS RESERVED.

LOC	DIST
AA	00

REVISIONS

P	LTR	DESCRIPTION	DATE	DWN	APVD
	B	ECO-07-017784	14AUG07	LAM	PR

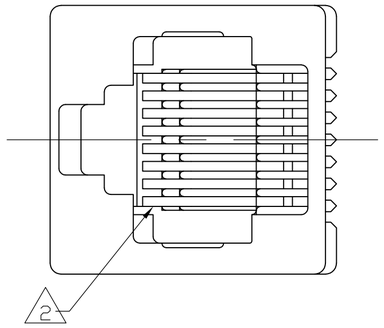

1. MATERIAL: HOUSING – HTN MOLDING COMPOUND, UL 94V-0 COLOR: BLACK
TERMINAL – 0.36[.014] THICK PHOS BRONZE PLATED WITH 1.27µm [.000050] MIN THICK HARD GOLD IN LOCALIZED GOLD PLATE AREA, 3.81µm [.000150] MIN THICK MATTE TIN IN SOLDER AREA AND 1.27µm [.000050] MIN THICK NICKEL UNDERPLATE

2. CAVITY CONFORMS TO FCC RULES AND REGULATIONS PART 68 AND REA BULLETIN 345-81 PE-76 SPECIFICATION FOR MODULAR TELEPHONE HARDWARE.

3. BULK PACKAGED IN A TRAY.

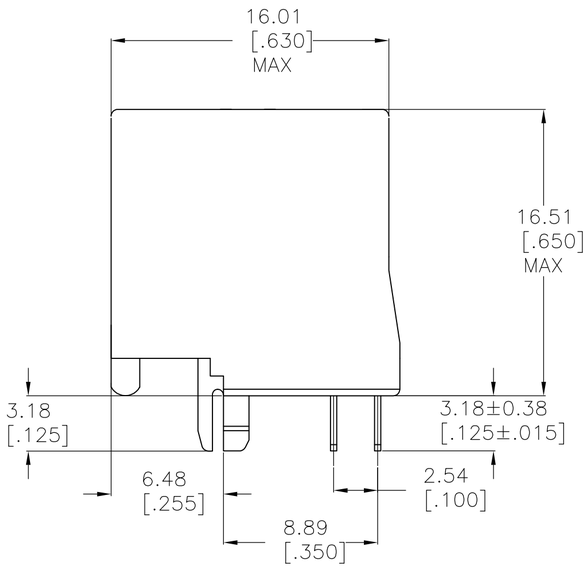

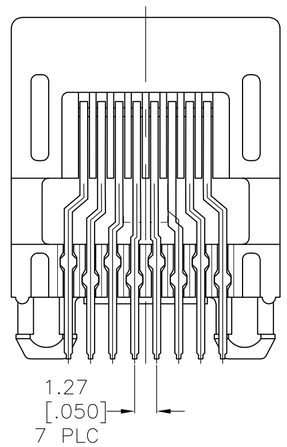

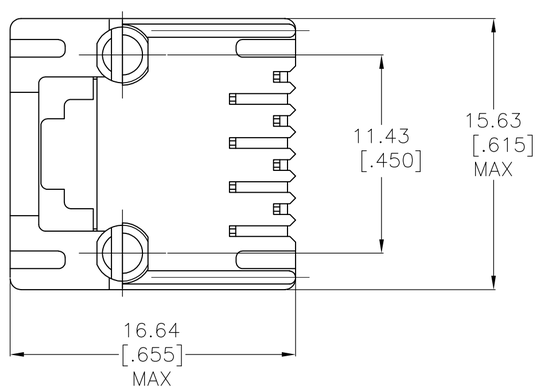

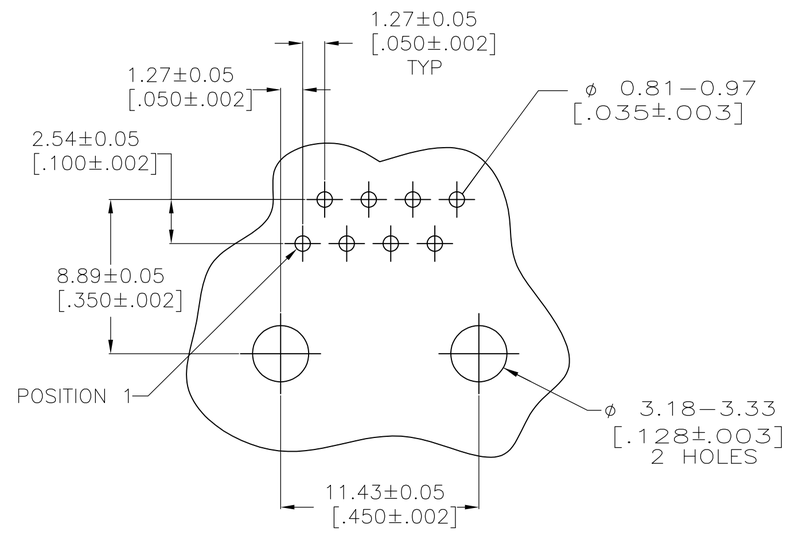

SUGGESTED PRINTED CIRCUIT BOARD LAYOUT

COMPONENT SIDE

5569284

THIS DRAWING IS A CONTROLLED DOCUMENT.		DWN L.A.MAYER 06JUN2005	Tyco Electronics Corporation, Harrisburg, PA 17105-3608
DIMENSIONS: mm [INCHES]	TOLERANCES UNLESS OTHERWISE SPECIFIED: 0 PLC ± – ; 1 PLC ± – ; 2 PLC ± 0.13[.005] ; 3 PLC ± – ; 4 PLC ± – ; ANGLES ± –	CHK P.RECCE 14AUG2007	
		APVD S. FLICKINGER 14AUG2007	NAME: MODULAR JACK ASSEMBLY, TOP ENTRY, 8 POSITION, FLANGELESS
		PRODUCT SPEC 108-1163	
		APPLICATION SPEC 114-2048	SIZE A2 · CAGE CODE 00779 · DRAWING NO C-5569284 · RESTRICTED TO —
MATERIAL SEE NOTE 1	FINISH SEE NOTE 1	WEIGHT –	
		CUSTOMER DRAWING	SCALE 4:1 · SHEET 1 OF 1 · REV B