Chipsmall Limited consists of a professional team with an average of over 10 year of expertise in the distribution of electronic components. Based in Hongkong, we have already established firm and mutual-benefit business relationships with customers from,Europe,America and south Asia,supplying obsolete and hard-to-find components to meet their specific needs.

With the principle of “Quality Parts,Customers Priority,Honest Operation,and Considerate Service”,our business mainly focus on the distribution of electronic components. Line cards we deal with include Microchip,ALPS,ROHM,Xilinx,Pulse,ON,Everlight and Freescale. Main products comprise IC,Modules,Potentiometer,IC Socket,Relay,Connector.Our parts cover such applications as commercial,industrial, and automotives areas.

We are looking forward to setting up business relationship with you and hope to provide you with the best service and solution. Let us make a better world for our industry!

Contact us

Tel: +86-755-8981 8866 Fax: +86-755-8427 6832
Email & Skype: info@chipsmall.com Web: www.chipsmall.com
Address: A1208, Overseas Decoration Building, #122 Zhenhua RD., Futian, Shenzhen, China

THIS DRAWING IS UNPUBLISHED. RELEASED FOR PUBLICATION ,19 .
© COPYRIGHT 19 BY AMP INCORPORATED. ALL RIGHTS RESERVED.

LOC	DIST
AA	22

REVISIONS

P	LTR	DESCRIPTION	DATE	DWN	APVD
	D	REV; EC 0G7A-0191-98	29JAN99	DLD	CMB

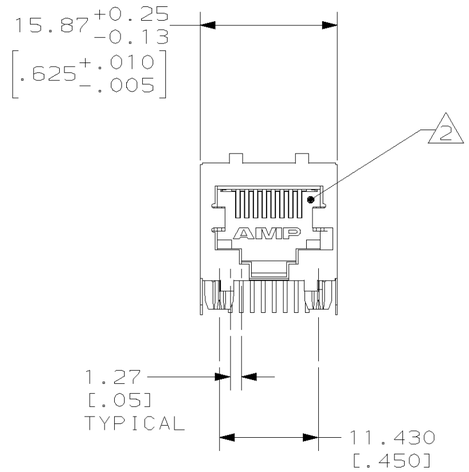

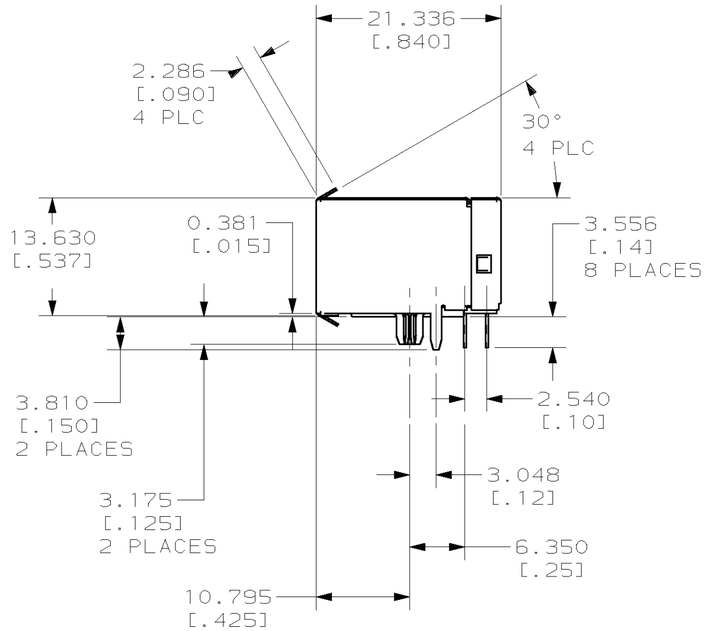

1. MATERIAL: HOUSING PCT POLYESTER, BLACK, IR COMPATIBLE, UL 94V-0.
TERMINALS - 0.33[.013] THICK PHOS BRONZE PLATED WITH 1.27µm[.000050] MINIMUM THICK HARD GOLD IN LOCALIZED AREA AND 3.81µm [.000150] MINIMUM THICK TIN-LEAD IN SOLDER AREA OVER 1.27µm[.000050] MINIMUM THICK NICKEL UNDERPLATE.
SHIELDS - 0.254[.010] THICK COPPER ALLOY PLATED WITH 2.03µm[.000080] MINIMUM TIN-LEAD OVER 2.54µm[.000100] MINIMUM COPPER.

2. JACK CAVITY CONFORMS TO FCC RULES AND REGULATIONS, PART 68 SUBPART F.

3. ALL DIMENSIONS SHOWN ARE NOMINAL UNLESS OTHERWISE SPECIFIED.

4. CAUTION: CATEGORY 5 JACK SOLDER TAIL POSITIONS DO NOT FOLLOW SAME NUMBER SEQUENCE AS THAT OF TRADITIONAL JACKS.

5. USE #30 DRILL BIT OR 3.25mm DRILL BIT WHEN PRODUCING THESE PCB HOLES.

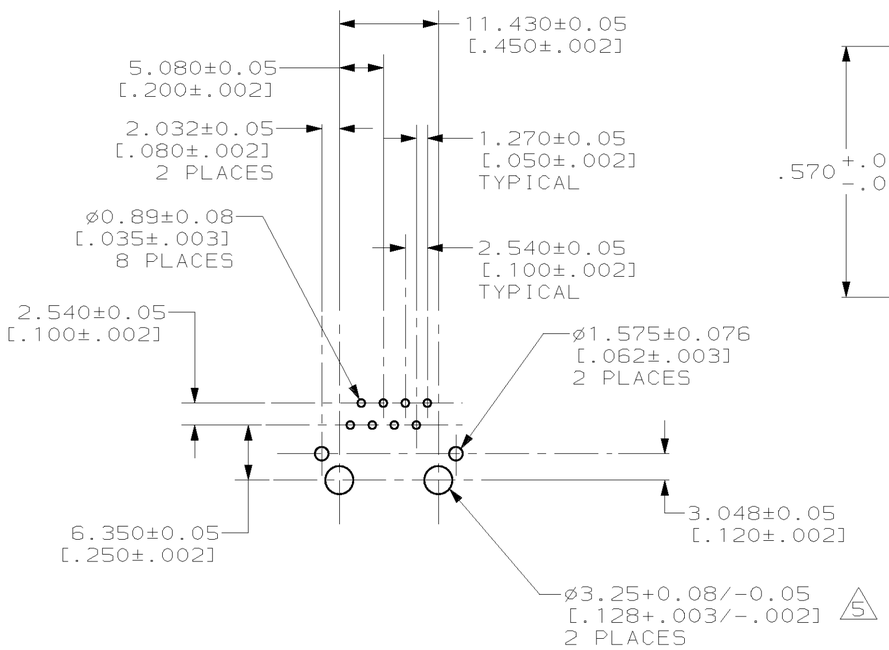

SUGGESTED PC BOARD LAYOUT
COMPONENT SIDE

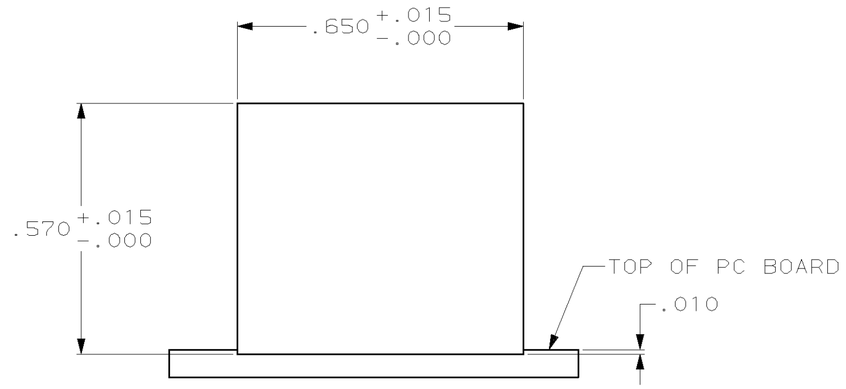

SUGGESTED PANEL CUTOUT
SCALE 4:1

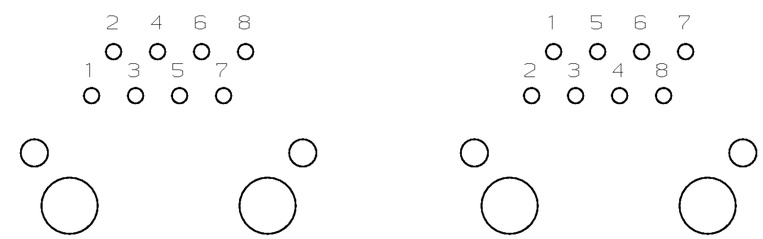

TRADITIONAL JACK

4 CATEGORY 5 JACK

558344

558344-1
PART NUMBER

THIS DRAWING IS A CONTROLLED DOCUMENT FOR AMP INCORPORATED. IT IS SUBJECT TO CHANGE AND THE CONTROLLING ENGINEERING ORGANIZATION SHOULD BE CONTACTED FOR THE LATEST REVISION.

DIMENSIONS: mm[INCHES]

TOLERANCES UNLESS OTHERWISE SPECIFIED:
0 PLC ±-
1 PLC ±-
2 PLC ±0.254[.01]
3 PLC ±0.127[.005]
4 PLC ±-
ANGLES ±-

MATERIAL 1
FINISH 1

DWN	T. PITTS	2-2-94
CHK	B. FOX	2-16-94
APVD	G. REED	2-16-94
PRODUCT SPEC	108-1163	
APPLICATION SPEC	114-2048	
WEIGHT	–	

CUSTOMER DRAWING

AMP Incorporated
Harrisburg, PA 17105-3608

NAME: MODULAR JACK ASSEMBLY, 8 POSITION, RIGHT ANGLE, LOW PROFILE, SHIELDED, PANEL GROUND, CATEGORY 5

SIZE	CAGE CODE	DRAWING NO	SCALE	SHEET	OF	REV
A2	00779	C-558344	2:1	1	1	D

AMP 1471-9 REV 09MAY94

02-FEB-99 09:45:11 amp36051 /home/amp36051/edmmod