Chipsmall Limited consists of a professional team with an average of over 10 year of expertise in the distribution of electronic components. Based in Hongkong, we have already established firm and mutual-benefit business relationships with customers from,Europe,America and south Asia,supplying obsolete and hard-to-find components to meet their specific needs.

With the principle of “Quality Parts,Customers Priority,Honest Operation,and Considerate Service”,our business mainly focus on the distribution of electronic components. Line cards we deal with include Microchip,ALPS,ROHM,Xilinx,Pulse,ON,Everlight and Freescale. Main products comprise IC,Modules,Potentiometer,IC Socket,Relay,Connector.Our parts cover such applications as commercial,industrial, and automotives areas.

We are looking forward to setting up business relationship with you and hope to provide you with the best service and solution. Let us make a better world for our industry!

Contact us

Tel: +86-755-8981 8866 Fax: +86-755-8427 6832
Email & Skype: info@chipsmall.com Web: www.chipsmall.com
Address: A1208, Overseas Decoration Building, #122 Zhenhua RD., Futian, Shenzhen, China

DRAWING MADE IN THIRD ANGLE PROJECTION

THIS DRAWING IS UNPUBLISHED. RELEASED FOR PUBLICATION ,19 .
© COPYRIGHT 19 BY AMP INCORPORATED. ALL INTERNATIONAL RIGHTS RESERVED.

LOC	DIST
EW	16

REVISIONS

P	F	ZONE	LTR	DESCRIPTION	DATE	APPD
			O	REL PER NPR 95-34	9-15-95	JH/JD
			A	REV PER 0A10-0013-97	2-18-97	DK/RS

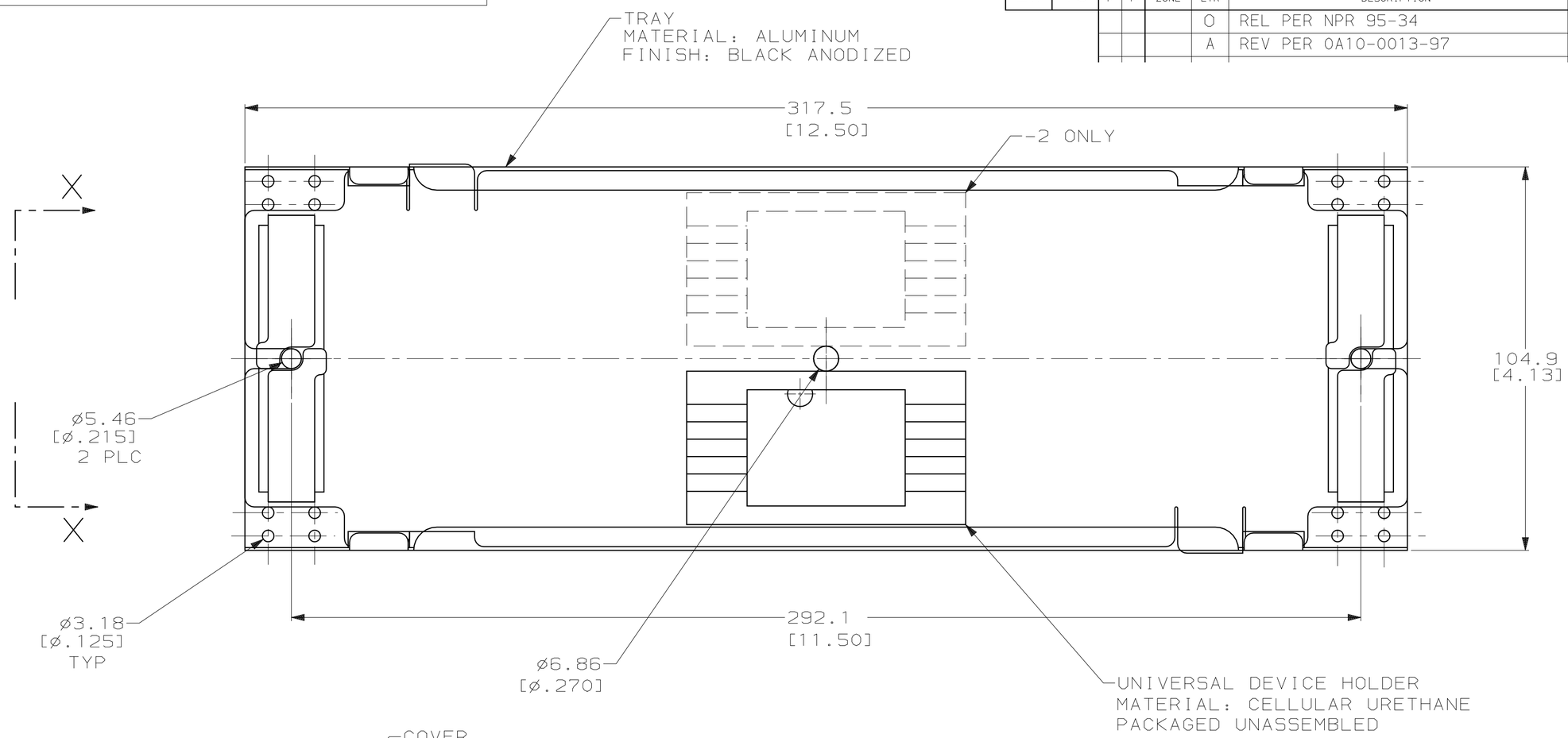

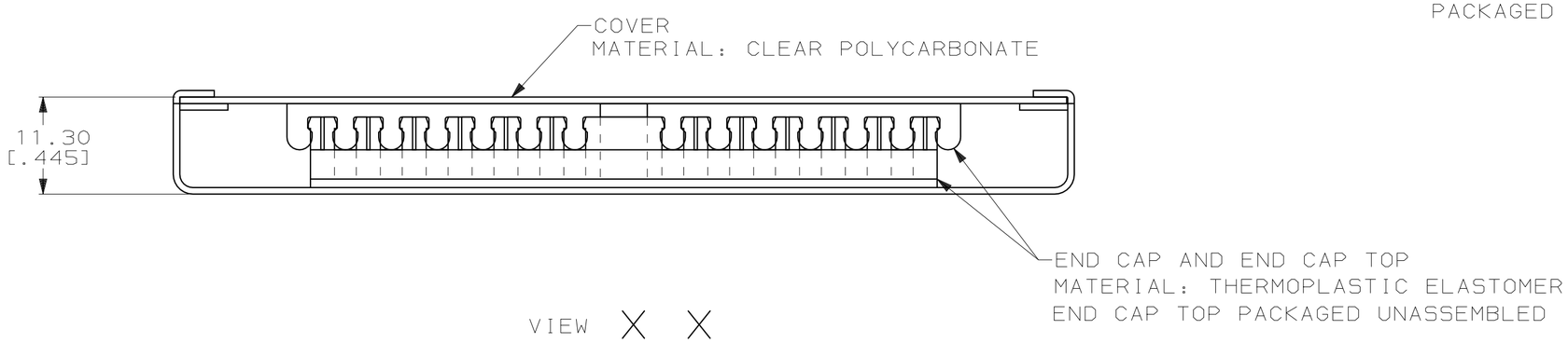

VIEW X X
SCALE 2:1

559308

1. THE FOLLOWING PARTS ARE BAGGED AND PROVIDED WITH TRAY
   1 12 LINE SPLICE LABEL
   1 WARNING LABEL

QTY - DEVICE HOLDERS	PART NO
2	559308-2
1	559308-1

DO NOT SCALE PRINT.
UNLESS SPECIFIED
DIMENSIONS IN mm [INCHES]
TOLERANCES ON :
2 PLC DEC ± 0.5[.02]
3 PLC DEC ± 0.13[.005]
ANGLES ± -

MATERIAL: SEE CALLOUTS

FINISH: SEE CALLOUTS

DR 9-19-95 J.HOFFER
CHK 9-19-95 J.W.DAVIS
APPD 9-19-95 P.PARKE
APPD 9-19-95 J.EBERLE
PRODUCT SPEC -
APPLICATION SPEC -
WEIGHT -

AMP Incorporated
Harrisburg, PA 17105-3608

NAME: SPLICE TRAY ASSEMBLY

SIZE: C | CAGE CODE: 00779 | DRAWING NO: C-559308
SCALE: 1:1 | SHEET: 1 OF 1

THIS DRAWING IS A CONTROLLED DOCUMENT FOR AMP INCORPORATED. IT IS SUBJECT TO CHANGE AND THE CONTROLLING ENGINEERING ORGANIZATION SHOULD BE CONTACTED FOR THE LATEST REVISION.

CUSTOMER DRAWING

AMP 1471-6 REV 3-92
07-MAR-97