Chipsmall Limited consists of a professional team with an average of over 10 year of expertise in the distribution of electronic components. Based in Hongkong, we have already established firm and mutual-benefit business relationships with customers from,Europe,America and south Asia,supplying obsolete and hard-to-find components to meet their specific needs.

With the principle of “Quality Parts,Customers Priority,Honest Operation,and Considerate Service”,our business mainly focus on the distribution of electronic components. Line cards we deal with include Microchip,ALPS,ROHM,Xilinx,Pulse,ON,Everlight and Freescale. Main products comprise IC,Modules,Potentiometer,IC Socket,Relay,Connector.Our parts cover such applications as commercial,industrial, and automotives areas.

We are looking forward to setting up business relationship with you and hope to provide you with the best service and solution. Let us make a better world for our industry!

Contact us

Tel: +86-755-8981 8866 Fax: +86-755-8427 6832
Email & Skype: info@chipsmall.com Web: www.chipsmall.com
Address: A1208, Overseas Decoration Building, #122 Zhenhua RD., Futian, Shenzhen, China

THIS DRAWING IS UNPUBLISHED. RELEASED FOR PUBLICATION -,- .
© COPYRIGHT - BY TYCO ELECTRONICS CORPORATION. ALL RIGHTS RESERVED.

LOC	DIST
AA	00

REVISIONS

P	LTR	DESCRIPTION	DATE	DWN	APVD
	C	ECO-07-029491	29FEB2008	LAM	AWF
	C1	REVISED PER ECO-09-024927	10NOV09	KK	AEG

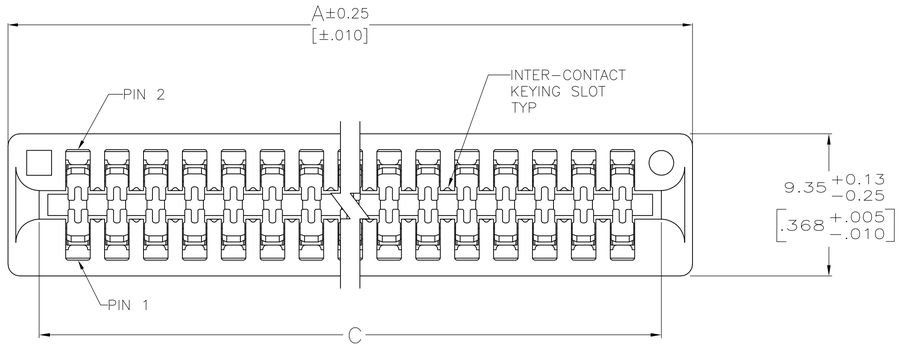

1. MATERIAL:
   HOUSING: GLASS FILLED POLYESTER; COLOR: BLACK.
   CONTACT: PHOS BRONZE
2. FINISH:
   0.00076[.000030] MIN GOLD PLATE IN CONTACT AREA,
   0.00254[.000100] MIN MATTE TIN ON SOLDER POSTS, ALL
   OVER 0.00127[.000050] MIN NICKEL
3. AMP LOGO, TE PART NUMBER, DATE CODE AND CSA LOGO INK STAMPED WHITE (HOT STAMPED OR LAZER PRINTED) IN THE APPROXIMATE AREA SHOWN, EITHER SIDE PERMISSABLE, WHEN HOUSING SIZE PERMITS
4. RECOMMENDED PCB FINISHED HOLE DIAMETER = 1.02±0.08 [.040±.003]
5. THE RETENTIVE FEATURE OF THIS CONNECTOR IS DEIGNED FOR FULL SEATING IN 1.57±0.20[.062±.008] THICK CIRCUIT BOARDS. FOR APPLICATIONS IN BOARDS OF OTHER THICKNESSES, CONTACT TYCO ELECTRONICS
6. OBSOLETE PARTS: OBSOLETE CIS STREAMLINING PER D.RENAUD/D.SINISI

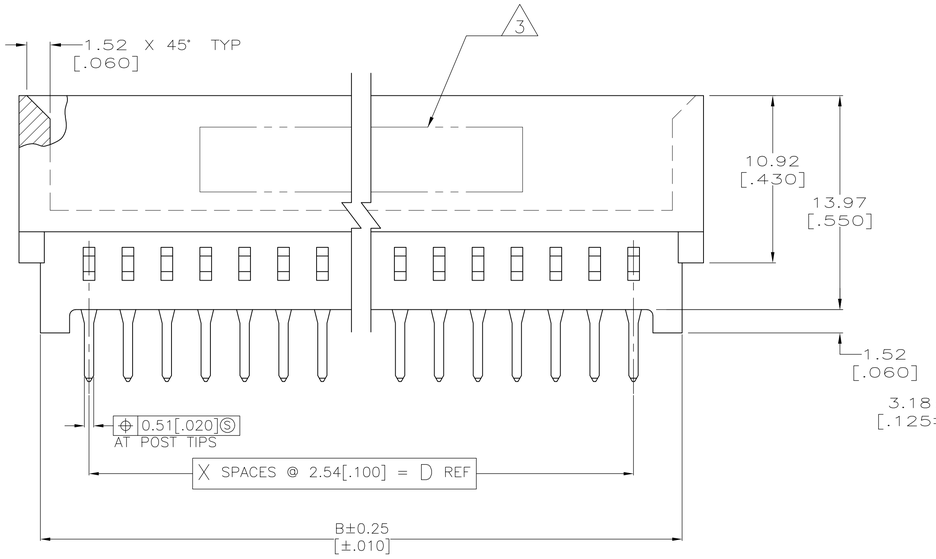

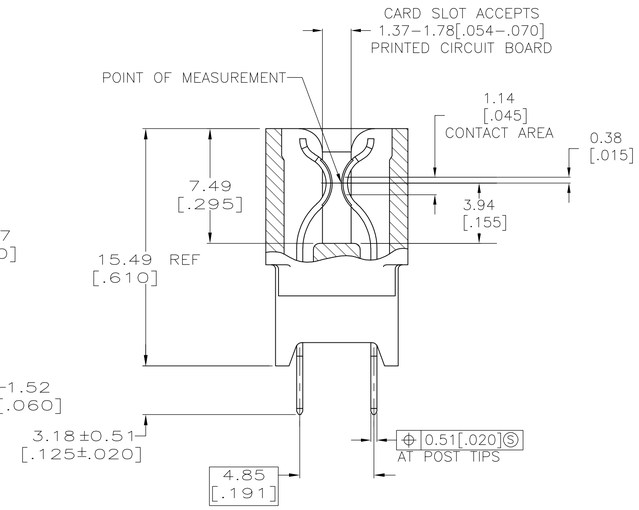

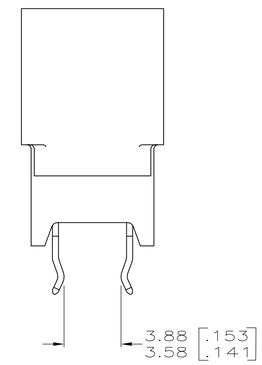

BOARD RETENTION FEATURE (SEE TABLE FOR LOCATION)

OBSOLETE	2-5645235-1
OBSOLETE	1-5645235-7
OBSOLETE	1-5645235-3
	PART NUMBER

	BOARD RETENTION FEATURE LOCATION	D	C	B	A	X	NO OF POSN	PART NUMBER
OBSOLETE 6	3-6, 55-58, 63-66, 115-118	149.86 [5.900]	154.94 [6.100]	156.21 [6.150]	159.00 [6.260]	59	60	1-5645235-8
	3-6, 65-68	86.36 [3.400]	91.44 [3.600]	92.71 [3.650]	95.50 [3.760]	34	35	1-5645235-1
	3-6, 35-38	53.34 [2.100]	58.42 [2.300]	59.69 [2.350]	62.48 [2.460]	21	22	5645235-7
	3-6, 31-34	43.18 [1.700]	48.26 [1.900]	49.53 [1.950]	52.32 [2.060]	17	18	5645235-4
	3-6, 49-52, 95-98	124.46 [4.900]	129.54 [5.100]	130.81 [5.150]	133.60 [5.260]	49	50	5645235-3
	3-6, 29-32 OR 31-34, 57-60	76.20 [3.000]	81.28 [3.200]	82.55 [3.250]	85.34 [3.360]	30	31	5645235-1

THIS DRAWING IS A CONTROLLED DOCUMENT.

DIMENSIONS: mm

TOLERANCES UNLESS OTHERWISE SPECIFIED:
0 PLC ± –
1 PLC ± –
2 PLC ± 0.13 [.005]
3 PLC ± –
4 PLC ± –
ANGLES ± 2°

MATERIAL: SEE NOTE 1
FINISH: SEE NOTE 2

DWN AWF/L.A.MAYER 29FEB2008
CHK A.W.FRANTUM 29FEB2008
APVD S.FLICKINGER 29FEB2008
PRODUCT SPEC 108-9039
APPLICATION SPEC 114-13018
WEIGHT –

Tyco Electronics
Tyco Electronics Corporation
Harrisburg, Pa 17105-3608

NAME: CONNECTOR ASSEMBLY, STANDARD EDGE II, 2.54 [.100] CENTERLINE

SIZE	CAGE CODE	DRAWING NO	RESTRICTED TO
A1	00779	C-5645235	–

CUSTOMER DRAWING | SCALE 5:1 | SHEET 1 OF 1 | REV C1