Chipsmall Limited consists of a professional team with an average of over 10 year of expertise in the distribution of electronic components. Based in Hongkong, we have already established firm and mutual-benefit business relationships with customers from,Europe,America and south Asia,supplying obsolete and hard-to-find components to meet their specific needs.

With the principle of “Quality Parts,Customers Priority,Honest Operation,and Considerate Service”,our business mainly focus on the distribution of electronic components. Line cards we deal with include Microchip,ALPS,ROHM,Xilinx,Pulse,ON,Everlight and Freescale. Main products comprise IC,Modules,Potentiometer,IC Socket,Relay,Connector.Our parts cover such applications as commercial,industrial, and automotives areas.

We are looking forward to setting up business relationship with you and hope to provide you with the best service and solution. Let us make a better world for our industry!

# Contact us

Tel: +86-755-8981 8866 Fax: +86-755-8427 6832
Email & Skype: info@chipsmall.com Web: www.chipsmall.com
Address: A1208, Overseas Decoration Building, #122 Zhenhua RD., Futian, Shenzhen, China

THIS DRAWING IS UNPUBLISHED. RELEASED FOR PUBLICATION -,- .
© COPYRIGHT - By - ALL RIGHTS RESERVED.

| LOC | DIST |
|---|---|
| AD | 25 |

REVISIONS

| P | LTR | DESCRIPTION | DATE | DWN | APVD |
|---|---|---|---|---|---|
| | P | REVISED PER ECO-11-004835 | 11MAR11 | RK | HMR |

1. HOUSING MATERIAL: GLASS-FILLED POLYMER.
2. CONTACT MATERIAL: COPPER ALLOY.
3. CONTACT FINISH: DIN 41612 CLASS 2 IN CONTACT AREA. TIN PLATE ON POSTS.
4. RECOMMENDED HOLE SIZE FOR MANUAL APPLICATION OF CONNECTOR ONTO PC BOARD.
5. PART NUMBER, DATE CODE IDENTIFICATION, CSA LOGO, THIS APPROXIMATE AREA.
6. CONTACT POINT.
7. MARKING ON THIS SIDE.
8. CONTACT FINISH: DIN 41612 CLASS 3 IN CONTACT AREA. TIN PLATE ON POSTS.

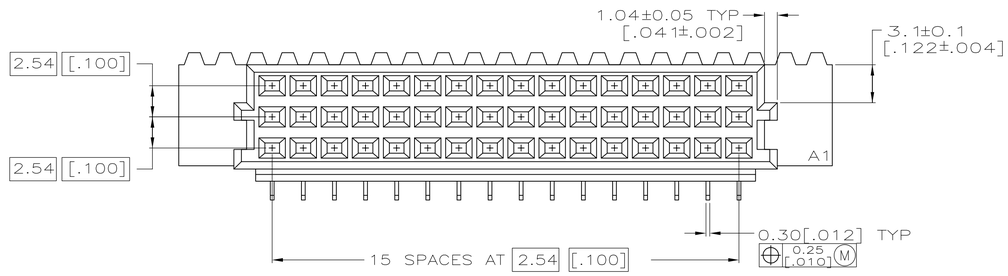


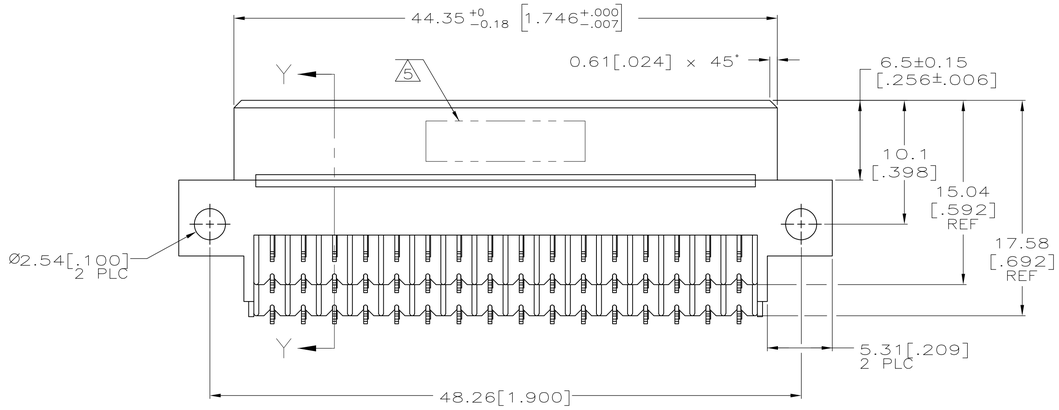


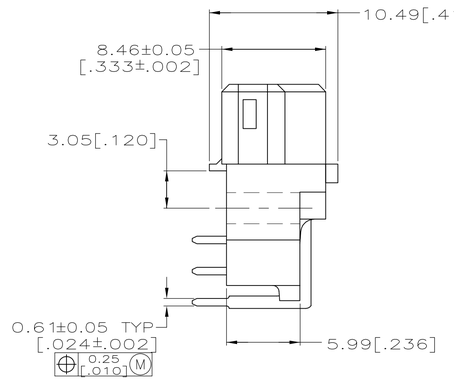


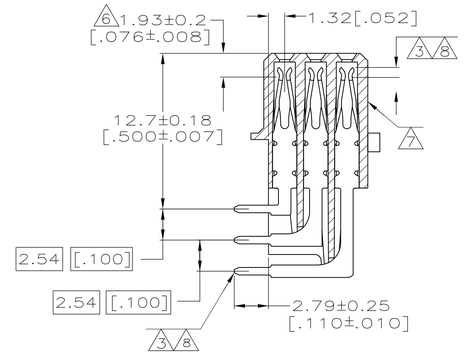


SECTION Y-Y

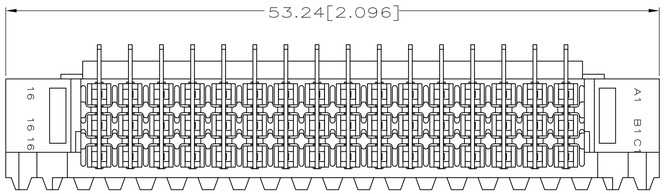


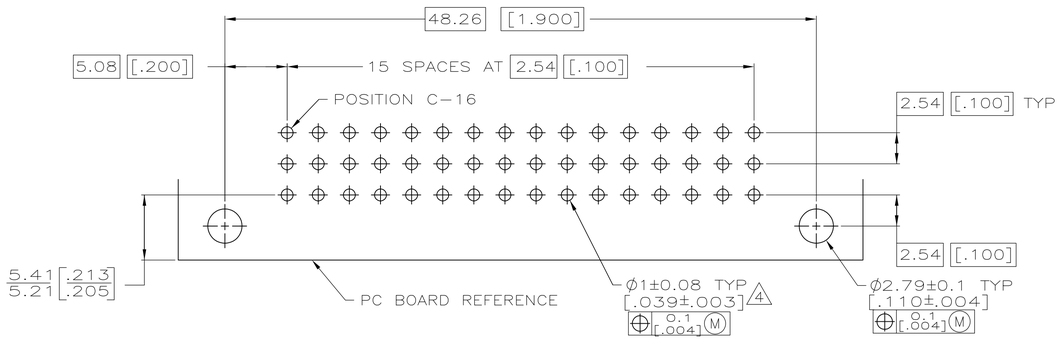


PC BOARD LAYOUT

| NOTES | POSITIONS LOADED | ROWS LOADED C | ROWS LOADED B | ROWS LOADED A | NO. OF LOADED POSITION | ASSY PART NUMBER |
|---|---|---|---|---|---|---|
| 8 | 1 THRU 16 | X | X | X | 48 | 5650868-9 |
| 3 | 1 THRU 16 | X | X | X | 48 | 5650868-5 |
| 3 | 1 THRU 16 | X | X | X | 48 | 5650868-4 |

THIS DRAWING IS A CONTROLLED DOCUMENT.

DIMENSIONS: mm [INCHES]

TOLERANCES UNLESS OTHERWISE SPECIFIED:
0 PLC ± –
1 PLC ± –
2 PLC ± –
3 PLC ± 0.13[.005]
4 PLC ± –
ANGLES ± –

MATERIAL 1 2
FINISH 3 8

DWN J. POLIGNONE 03JUN05
CHK A. SHARPE 03JUN05
APVD A. SHARPE 03JUN05
PRODUCT SPEC –
APPLICATION SPEC –
WEIGHT –

TE Connectivity

NAME ASSEMBLY, RECEPTACLE, EUROCARD, TYPE 1/2R, LEAD-FREE, 48 POSITION 2.79[.110] SOLDER POSTS

| SIZE | CAGE CODE | DRAWING NO | RESTRICTED TO |
|---|---|---|---|
| A1 | 00779 | C-5650868 | – |

CUSTOMER DRAWING | SCALE 4:1 | SHEET 1 OF 1 | REV P