Chipsmall Limited consists of a professional team with an average of over 10 year of expertise in the distribution of electronic components. Based in Hongkong, we have already established firm and mutual-benefit business relationships with customers from,Europe,America and south Asia,supplying obsolete and hard-to-find components to meet their specific needs.

With the principle of “Quality Parts,Customers Priority,Honest Operation,and Considerate Service”,our business mainly focus on the distribution of electronic components. Line cards we deal with include Microchip,ALPS,ROHM,Xilinx,Pulse,ON,Everlight and Freescale. Main products comprise IC,Modules,Potentiometer,IC Socket,Relay,Connector.Our parts cover such applications as commercial,industrial, and automotives areas.

We are looking forward to setting up business relationship with you and hope to provide you with the best service and solution. Let us make a better world for our industry!

Contact us

Tel: +86-755-8981 8866 Fax: +86-755-8427 6832
Email & Skype: info@chipsmall.com Web: www.chipsmall.com
Address: A1208, Overseas Decoration Building, #122 Zhenhua RD., Futian, Shenzhen, China

THIS DRAWING IS UNPUBLISHED. RELEASED FOR PUBLICATION ,19 .
© COPYRIGHT 19 BY AMP INCORPORATED. ALL RIGHTS RESERVED.

LOC	DIST
AA	22

REVISIONS

P	LTR	DESCRIPTION	DATE	DWN	APVD
	J	REVISED; EC 0U1C-0088-01	07MAR01	DLD	ECL

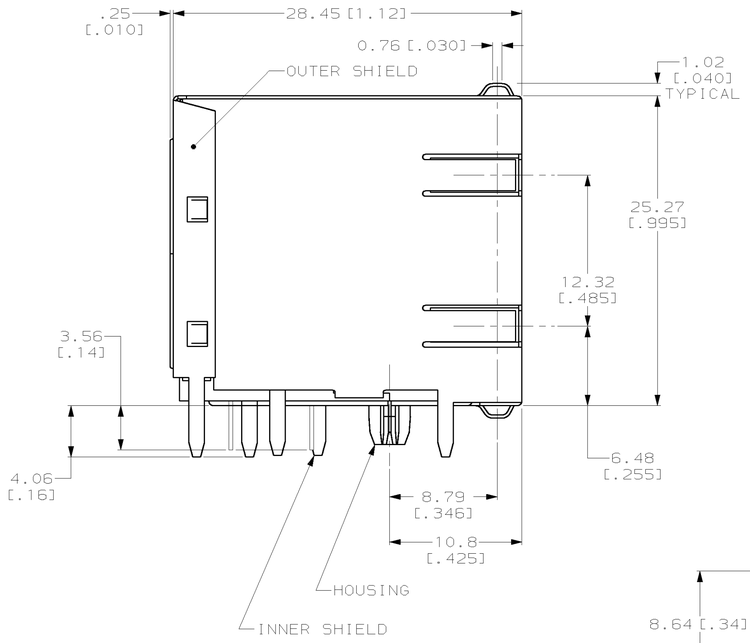

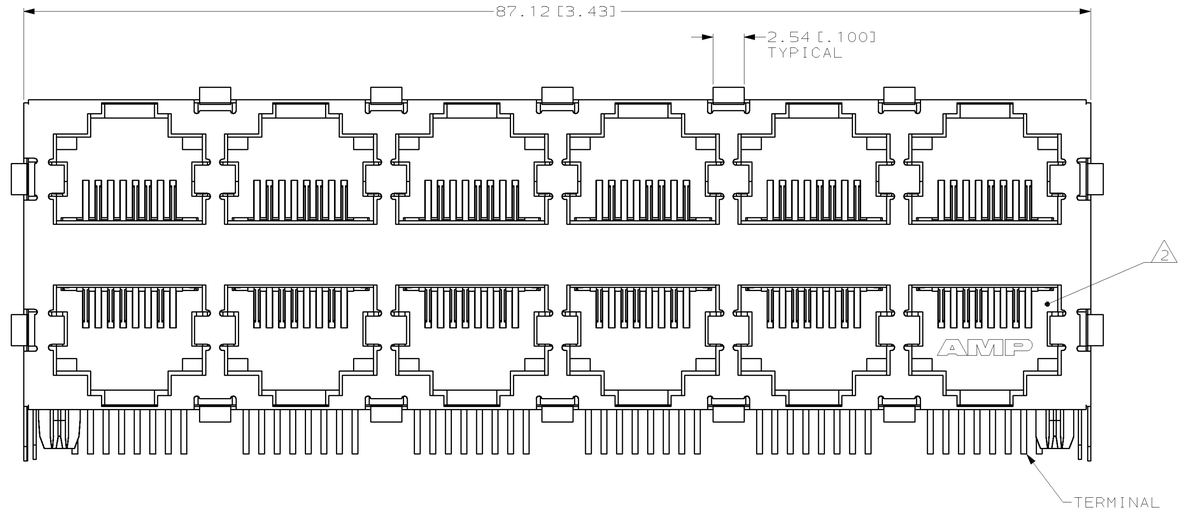

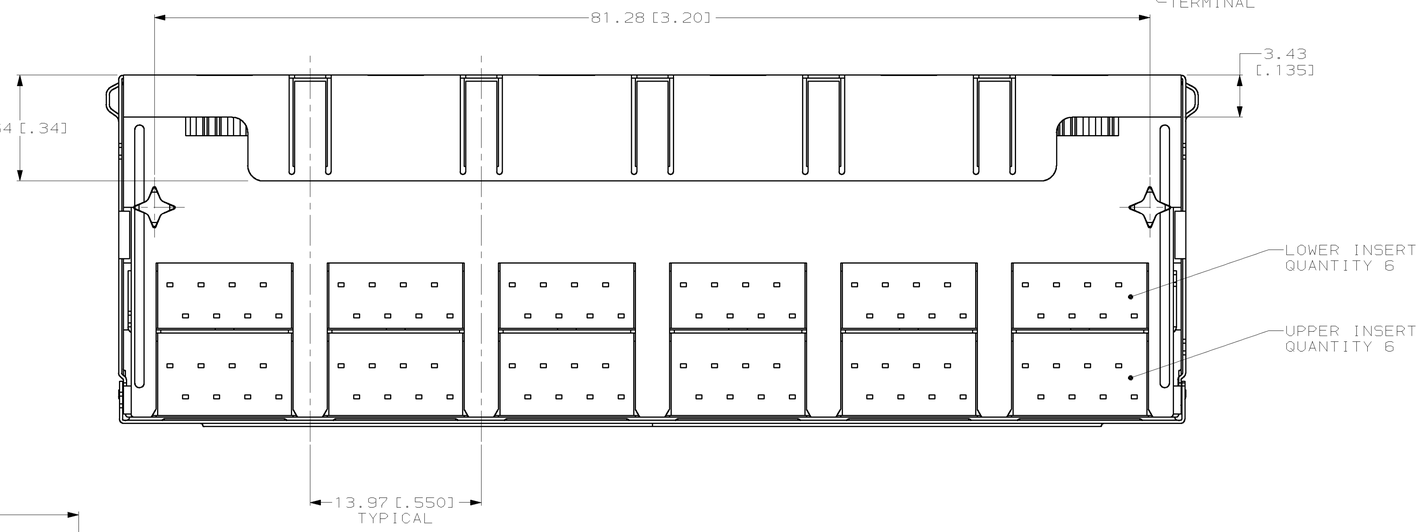

1. MATERIAL: HOUSING - PCT POLYESTER, BLACK, UL 94V-0.
OVERMOLDED TERMINAL ARRAY - PBT, BROWN.
TERMINALS - 0.33[.013] THICK PHOS BRONZE PLATED WITH 1.27µm[.000050] MINIMUM THICK HARD GOLD IN LOCALIZED AREA AND 3.81µm [.000150] MINIMUM THICK TIN-LEAD IN SOLDER AREA OVER 1.27µm[.000050] MINIMUM THICK NICKEL UNDERPLATE.
SHIELD - 0.25[.010] THICK COPPER ALLOY PLATED WITH 2.03µm[.000080] MINIMUM TIN-LEAD OVER 2.54µm[.000100] MINIMUM COPPER OR 1.27µm [.000050] MINIMUM NICKEL UNDERPLATE.

2. JACK CAVITY CONFORMS TO FCC RULES AND REGULATIONS, PART 68 SUBPART F.

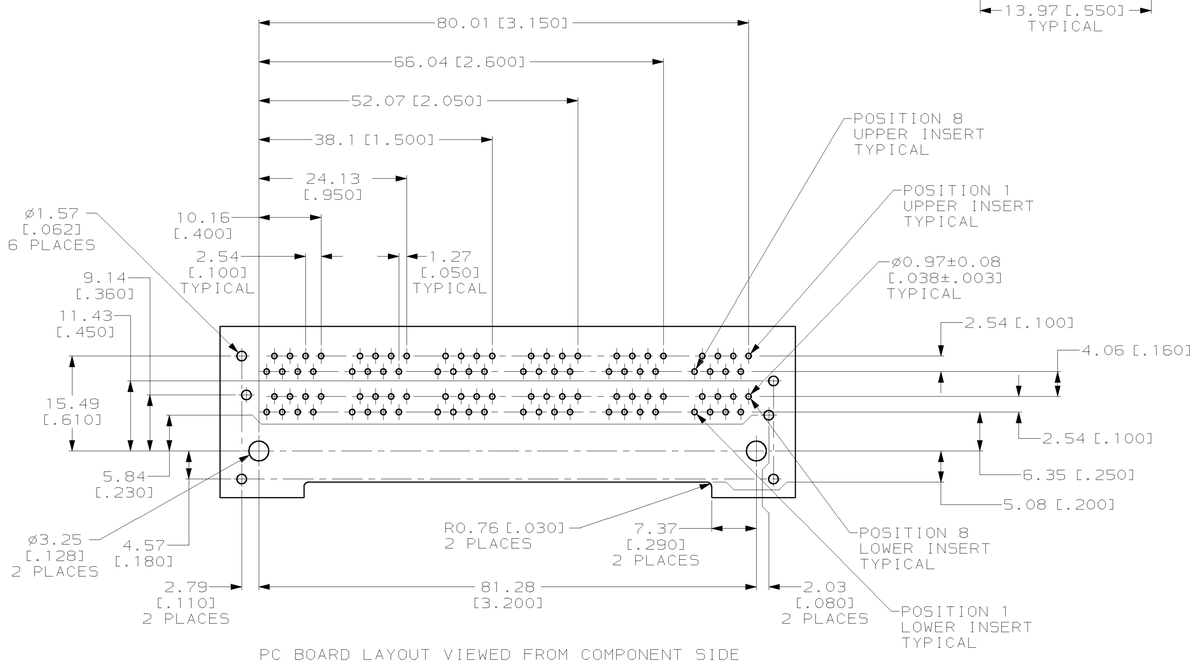

PC BOARD LAYOUT VIEWED FROM COMPONENT SIDE
SCALE 2:1

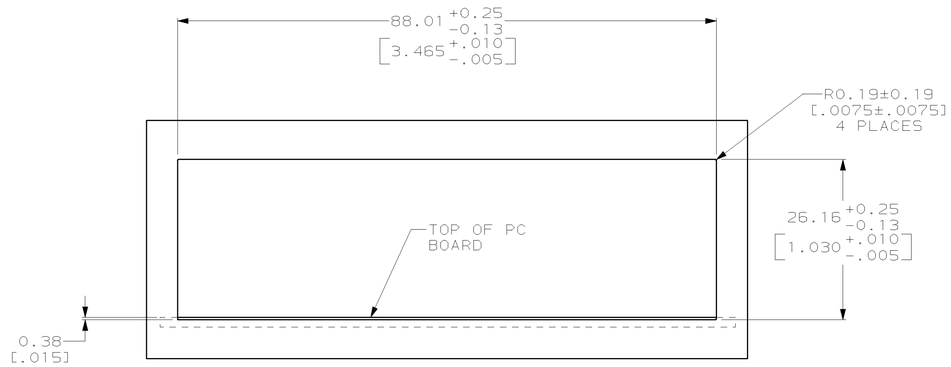

SUGGESTED PANEL CUTOUT DIMENSIONS
SCALE 2:1

PART NUMBER	569263-1

THIS DRAWING IS A CONTROLLED DOCUMENT FOR AMP INCORPORATED. IT IS SUBJECT TO CHANGE AND THE CONTROLLING ENGINEERING ORGANIZATION SHOULD BE CONTACTED FOR THE LATEST REVISION.

DIMENSIONS: mm [INCHES]

TOLERANCES UNLESS OTHERWISE SPECIFIED:
0 PLC ±-
1 PLC ±-
2 PLC ±0.25[.01]
3 PLC ±0.13[.005]
4 PLC ±-
ANGLES ±-

MATERIAL 1
FINISH 1

DWN	T. SPRINKLE	09 JUN 95
CHK	C. WHITT	23 JUN 95
APVD	L. VARSIK	30 JUN 95
PRODUCT SPEC	—	
APPLICATION SPEC	—	
WEIGHT	—	

CUSTOMER DRAWING

AMP Incorporated
Harrisburg, PA 17105-3608

NAME: STACKED MODULAR JACK ASSEMBLY, 2x6 PORT, 8 POSITION, SHIELDED, PANEL GROUND, CATEGORY 5

SIZE	CAGE CODE	DRAWING NO
A1	00779	C-569263

SCALE	SHEET	OF	REV
4:1	1	1	J