Chipsmall Limited consists of a professional team with an average of over 10 year of expertise in the distribution of electronic components. Based in Hongkong, we have already established firm and mutual-benefit business relationships with customers from,Europe,America and south Asia,supplying obsolete and hard-to-find components to meet their specific needs.

With the principle of “Quality Parts,Customers Priority,Honest Operation,and Considerate Service”,our business mainly focus on the distribution of electronic components. Line cards we deal with include Microchip,ALPS,ROHM,Xilinx,Pulse,ON,Everlight and Freescale. Main products comprise IC,Modules,Potentiometer,IC Socket,Relay,Connector.Our parts cover such applications as commercial,industrial, and automotives areas.

We are looking forward to setting up business relationship with you and hope to provide you with the best service and solution. Let us make a better world for our industry!

Contact us

Tel: +86-755-8981 8866 Fax: +86-755-8427 6832
Email & Skype: info@chipsmall.com Web: www.chipsmall.com
Address: A1208, Overseas Decoration Building, #122 Zhenhua RD., Futian, Shenzhen, China

THIS DRAWING IS UNPUBLISHED. RELEASED FOR PUBLICATION -,- .
© COPYRIGHT - By - ALL RIGHTS RESERVED.

LOC	DIST
GP	00

REVISIONS

P	LTR	DESCRIPTION	DATE	DWN	APVD
	P	REVISED PER ECO-11-004835	11MAR11	RK	HMR

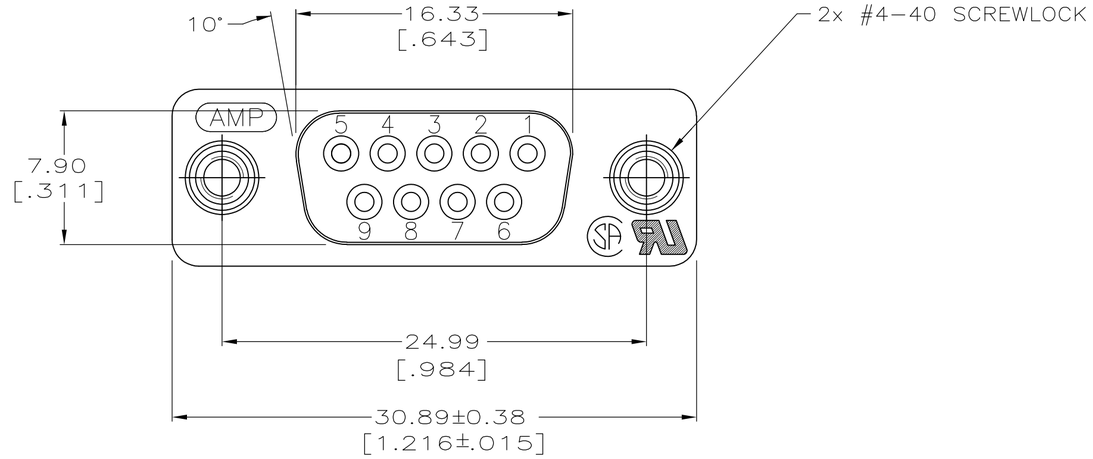

1. HOUSING: BLACK POLYESTER, UL 94V-0 RATED.
   CONTACTS: PHOSPHOR BRONZE.
   SCREWLOCKS: BRASS.
2. CONTACTS: SEE TABLE.
   SCREWLOCKS: 1.27 µm[.000050] MIN NICKEL OVER COPPER FLASH.
3. GOLD FLASH FOR A LENGTH OF 2.54[.100] MIN FROM MATING END, 2.54µm[.000100] MIN TIN ON OPPOSITE END, ALL OVER 1.27µm[.000050] MIN NICKEL.
4. 0.76µm[.000030] MIN GOLD FOR A LENGTH OF 2.54[.100] MIN FROM MATING END, 2.54µm[.000100] MIN TIN ON OPPOSITE END, ALL OVER 1.27µm[.000050] MIN NICKEL.

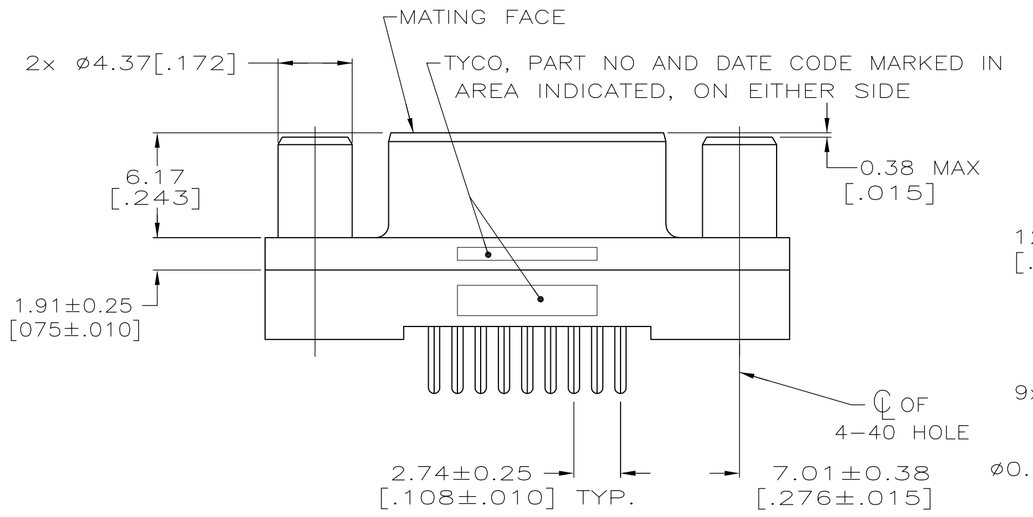

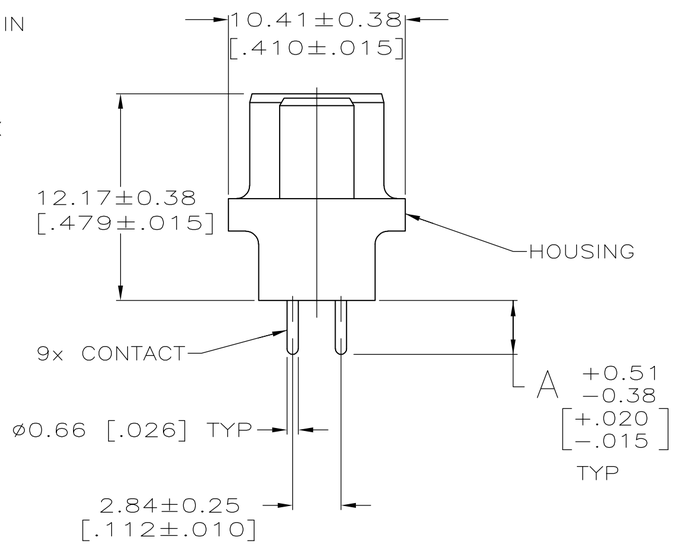

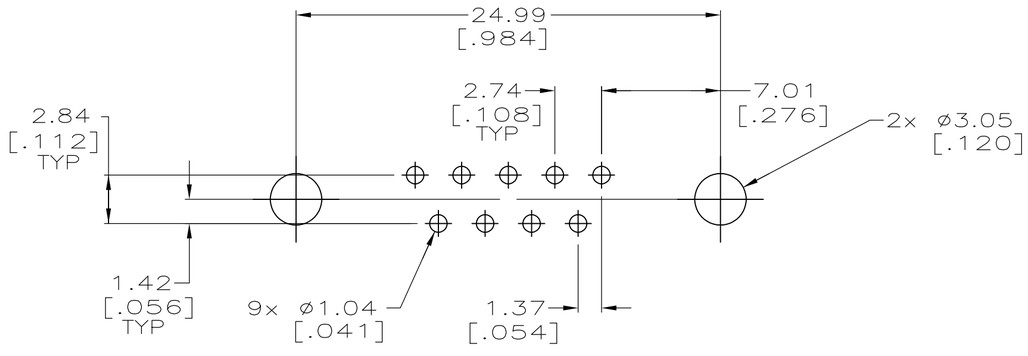

RECOMMENDED PC BOARD MOUNTING DIMENSIONS

A	CONTACT FINISH	PART NO
4.32 [.170]	4	5745076-6
3.18 [.125]	4	5745076-4
3.18 [.125]	3	5745076-3

COPYRIGHT 2005
TE CONNECTIVITY CORP
ALL RIGHTS RESERVED

THIS DRAWING IS A CONTROLLED DOCUMENT.

DIMENSIONS: mm[INCHES]

TOLERANCES UNLESS OTHERWISE SPECIFIED:
0 PLC ± -
1 PLC ± -
2 PLC ± 0.13 [.005]
3 PLC ± -
4 PLC ± -
ANGLES ± 2°

MATERIAL 1
FINISH 2

DWN G.PETERS 13SEP05
CHK S.BOLASH 13SEP05
APVD M.WALMSLEY 13SEP05
PRODUCT SPEC 108-40025
APPLICATION SPEC —
WEIGHT —

TE Connectivity

NAME: RECEPTACLE ASSEMBLY, SIZE 1, 9 POSN, VERTICAL, AMPLIMITE HD-20

SIZE	CAGE CODE	DRAWING NO	RESTRICTED TO
A2	00779	C-5745076	—

CUSTOMER DRAWING | SCALE 4:1 | SHEET 1 OF 1 | REV P

5745076

1471-9 (3/11)