Chipsmall Limited consists of a professional team with an average of over 10 year of expertise in the distribution of electronic components. Based in Hongkong, we have already established firm and mutual-benefit business relationships with customers from,Europe,America and south Asia,supplying obsolete and hard-to-find components to meet their specific needs.

With the principle of “Quality Parts,Customers Priority,Honest Operation,and Considerate Service”,our business mainly focus on the distribution of electronic components. Line cards we deal with include Microchip,ALPS,ROHM,Xilinx,Pulse,ON,Everlight and Freescale. Main products comprise IC,Modules,Potentiometer,IC Socket,Relay,Connector.Our parts cover such applications as commercial,industrial, and automotives areas.

We are looking forward to setting up business relationship with you and hope to provide you with the best service and solution. Let us make a better world for our industry!

Contact us

Tel: +86-755-8981 8866 Fax: +86-755-8427 6832
Email & Skype: info@chipsmall.com Web: www.chipsmall.com
Address: A1208, Overseas Decoration Building, #122 Zhenhua RD., Futian, Shenzhen, China

DRAWING MADE IN AMERICAN PROJECTION

© 1970 BY AMP INCORPORATED. ALL RIGHTS RESERVED. AMP PRODUCTS COVERED BY PATENTS AND/OR PATENTS PENDING.

583661-1 1. AS SHOWN

REVISIONS

ZONE	LTR	DESCRIPTION	DATE	APPROVED
	O	RELEASED, WAS CP 5125-68	10-13-70	[illegible]

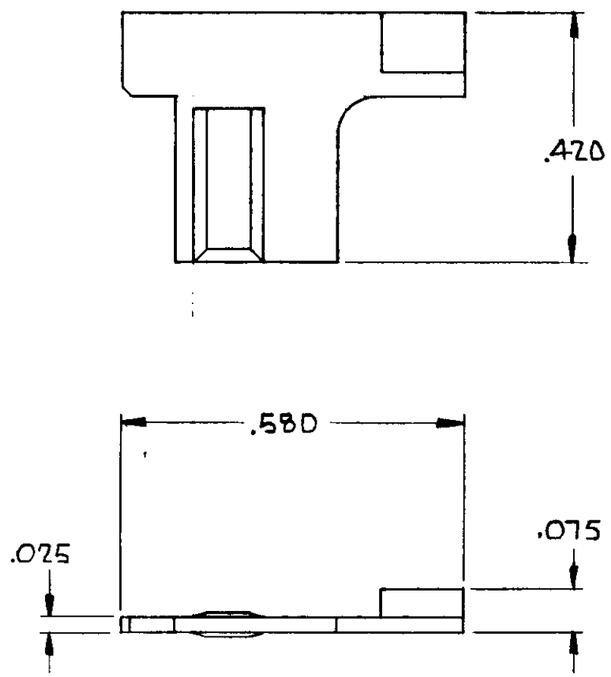

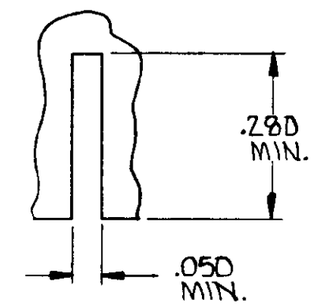

SUGGESTED CUTOUT
IN P.C. BOARD FOR KEYING PLUG

UNLESS OTHERWISE SPECIFIED DIMENSIONS ARE IN INCHES
TOLERANCES ON:
DECIMALS ± .005
ANGLES ± —

MATERIAL
GLASS FILLED NYLON
COLOR - BLACK

CONTRACT NO.
DR. [signature] 10-13-70
CHK [signature] 10-13-70
APPD [signature] 10-14-70
REL [signature] 10-14-70
DSGN APPD
OTHER APPD

AMP INCORPORATED
HARRISBURG, PENNSYLVANIA

NAME KEYING PLUG, DUO TYNE FLAG HOUSING

SIZE	CODE IDENT NO.	NUMBER
B	00779	583661

SCALE | SHEET

CUSTOMER DRAWING

AMP 1470-1 REV (7/68)

LOC AD

PRINT DIST 0 14