Chipsmall Limited consists of a professional team with an average of over 10 year of expertise in the distribution of electronic components. Based in Hongkong, we have already established firm and mutual-benefit business relationships with customers from,Europe,America and south Asia,supplying obsolete and hard-to-find components to meet their specific needs.

With the principle of “Quality Parts,Customers Priority,Honest Operation,and Considerate Service”,our business mainly focus on the distribution of electronic components. Line cards we deal with include Microchip,ALPS,ROHM,Xilinx,Pulse,ON,Everlight and Freescale. Main products comprise IC,Modules,Potentiometer,IC Socket,Relay,Connector.Our parts cover such applications as commercial,industrial, and automotives areas.

We are looking forward to setting up business relationship with you and hope to provide you with the best service and solution. Let us make a better world for our industry!

Contact us

Tel: +86-755-8981 8866 Fax: +86-755-8427 6832
Email & Skype: info@chipsmall.com Web: www.chipsmall.com
Address: A1208, Overseas Decoration Building, #122 Zhenhua RD., Futian, Shenzhen, China

PART NUMBER	LED COLOR
591-2001-102	HI.EFF. RED
591-2001-107	
591-2001-113	
591-2101-102	AlGaaS RED
591-2101-107	
591-2101-113	
591-2201-102	HI.INTENSITY GREEN
591-2201-107	
591-2201-113	
591-2301-102	GREEN
591-2301-107	
591-2301-113	
591-2401-102	YELLOW
591-2401-107	
591-2401-113	
591-2601-102	BLUE
591-2601-107	
591-2601-113	
591-2701-102	AlInGaP YELLOW
591-2701-107	
591-2701-113	
591-2801-102	WHITE
591-2801-107	
591-2801-113	

LED COLOR : HI.EFF.RED GREEN YELLOW

OPERATING CHARACTERISTICS AT 25°C AMBIENT

CHARACTERISTICS		MIN	TYP	MAX	UNITS	TEST CONDITIONS
LUMINOUS INTENSITY	HI.EFF.RED	5.6	9.8	14.0	mcd	I_F = 10 mA
	GREEN	7.1	10.6	14.0		
	YELLOW	7.1	12.6	18.0		
FORWARD VOLTAGE	HI.EFF.RED		2.0	2.5	V	I_F = 10 mA
	GREEN		2.0	2.5		
	YELLOW		2.0	2.5		
REVERSE VOLTAGE	HI.EFF.RED		5		V	I_R = 10 µA
	GREEN		5			
	YELLOW		5			
PEAK WAVELENGTH	HI.EFF.RED		635		nm	I_F = 10 mA
	GREEN		572			
	YELLOW		586			
DOMINANT WAVELENGTH	HI.EFF.RED	622	628	634	nm	I_F = 10 mA
	GREEN	564	570	576		
	YELLOW	580	587	595		

LED COLOR : HI.EFF.RED GREEN YELLOW

ABSOLUTE MAXIMUM RATING AT 25°C AMBIENT			UNITS
POWER DISSIPATION	HI.EFF.RED	95	mW
	GREEN		
	YELLOW		
CONTINUOUS FORWARD CURRENT	HI.EFF.RED	30	mA
	GREEN		
	YELLOW		
OPERATING TEMPERATURE	RED,GRN,YEL	-40 TO 100	°C
STORAGE TEMPERATURE	RED,GRN,YEL	-40 TO 100	°C

LED COLOR : BLUE

OPERATING CHARACTERISTICS AT 25°C AMBIENT

CHARACTERISTICS	MIN	TYP	MAX	UNITS	TEST CONDITIONS
LUMINOUS INTENSITY		6.0		mcd	I_F = 10 mA
FORWARD VOLTAGE		3.5	4.2	V	I_F = 10 mA
REVERSE CURRENT		.01	10	µA	V_R = 5 V

LED COLOR : BLUE

ABSOLUTE MAXIMUM RATING AT 25°C AMBIENT		UNITS
POWER DISSIPATION	100	mW
DERATE LINEARLY FROM 55°C	0.44	mA/°C
CONTINUOUS FORWARD CURRENT	20	mA
OPERATING TEMPERATURE	-40 TO 100	°C
STORAGE TEMPERATURE	-40 TO 100	°C
SOLDER PROFILE: IR 235 °C PEAK FOR 15 SEC / 185 °C FOR 90 SEC. MAX.		

LED COLOR : AlGaAs RED HI.INT.GREEN AlInGaP YELLOW

OPERATING CHARACTERISTICS AT 25°C AMBIENT

CHARACTERISTICS		MIN	TYP	MAX	UNITS	TEST CONDITIONS
LUMINOUS INTENSITY	AlGaAS RED		23.9		mcd	I_F = 10 mA
	HI.INT. GREEN		9.1			
	AlInGaP YELLOW		33.6			
FORWARD VOLTAGE	AlGaAS RED		1.8	2.4	V	I_F = 20 mA
	HI.INT. GREEN		2.1	2.6		
	AlInGaP YELLOW		2.0	2.4		
REVERSE VOLTAGE	AlGaAS RED	5			V	I_F = 10 mA
	HI.INT. GREEN	5				
	AlInGaP YELLOW	5				
DOMINANT WAVELENGTH	AlGaAS RED		638		nm	
	HI.INT. GREEN		569			
	AlInGaP YELLOW		595			

LED COLOR : AlGaAs RED HI.INT.GREEN AlInGaP YELLOW

ABSOLUTE MAXIMUM RATING AT 25°C AMBIENT			UNITS
POWER DISSIPATION	RED,GRN,YEL	100	mW
DERATE LINEARLY FROM 25°C	AlGaAS RED	0.8	mA/°C
	HI.INT. GREEN	0.6	
	AlInGaP YELLOW	0.6	
CONTINUOUS FORWARD CURRENT	AlGaAS RED	40	mA
	HI.INT. GREEN	30	
	AlInGaP YELLOW	50	
PEAK FORWARD CURRENT (1/10 DUTY CYCLE, 0.1 ms PULSE WIDTH)	AlGaAS RED	200	mA
	HI.INT. GREEN	120	
	AlInGaP YELLOW	160	
OPERATING TEMPERATURE	RED,GRN,YEL	-55 TO 100	°C
STORAGE TEMPERATURE	RED,GRN,YEL	-55 TO 100	°C
INFRARED REFLOW SOLDERING	RED,GRN,YEL	260°C FOR 5 SEC	
VAPOR PHASE SOLDERING	RED,GRN,YEL	215°C FOR 3 MIN	

LED COLOR : WHITE

OPERATING CHARACTERISTICS AT 25 °C AMBIENT

LED CHARACTERISTICS		MIN.	TYP.	MAX.	UNITS	TEST CONDITIONS
LUMINOUS INTENSITY			37.6		mcd	I_F = 10 mA
FORWARD VOLTAGE			3.5	4.2	V	I_F = 20 mA
REVERSE CURRENT			.01	10	µA	V_R = 5 V
COLOR COORDINATES	X	.29	.32	.365		I_F = 20 mA
	Y	.22	.31	.42		

LED COLOR : WHITE

ABSOLUTE MAXIMUM RATINGS AT 25 °C AMBIENT	
POWER DISSIPATION	85 mW
CONTINUOUS FORWARD CURRENT	20 mA
DERATE LINEARLY FROM 75 °C	.6 mA/°C
PEAK REVERSE VOLTAGE	5V
SOLDERING PROFILE: IR - 235 °C PEAK. - 15 SEC., 185 °C - 90 SEC MAX.	
OPERATING TEMPERATURE	-40 °C TO +100 °C
STORAGE TEMPERATURE	-40 °C TO +100 °C

REV.	ECN NO.	REVISIONS	DRN.	CKD.	APP.	DATE
A	——	NEW RELEASE	YY	---	N.O.	5-17-93
B	——	ADDED NOTES 6-8	YY	---	N.O.	1-12-94
C	——	CHANGE NOTE 7 - CHANGE WAVE-LENGTH FROM PEAK TO DOMINANT LED SPEC CHANGE	YY	---	N.O.	3-7-94
D	——	ADDED HI. GREEN AND AlInGaP YELLOW AND CHANGE TO ANOTHER AlGaAs RED CHANGE NOTE 8	AV	N.O.	N.O.	3-8-00
E	——	ADDED P/N 591-2801-102, 591-2801-107, 591-2801-113 AND WHITE LED SPEC ALSO ADDED NOTE 10, 11	YIS	D.C.	N.O.	3-1-02
F	——	UPDATED LED SPEC FOR HI.EFF.RED, GREEN & YELLOW	YIS	JMC	Y.C.	2-21-03
G	——	ADDED 591-2601-102,-107,-113 ADDED BLUE LED SPEC TABLE.	YIS			

NOTES :

1- MILLIMETER DIMENSIONS SHOWN FOR REFERENCE ONLY

2- PAD NUMBERS ARE FOR REFERENCE ONLY , DESIGNATION NON-EXISTENT ON PART

3- STORAGE CONDITIONS FOR TAPED PRODUCT: RE-TAPING MAY BE NECESSARY FOR PRODUCTS STORED MORE THAN TWELVE MONTHS

4- ORDER QUANTITY IS LED ASSEMBLIES , NOT REELS

5- ...-102 SUFFIX MEANS PARTS ARE PACKED ON A 20 pc SAMPLE STRIP
...-107 SUFFIX MEANS PARTS ARE PACKED ON A 7 INCH REEL , 400 pcs/REEL
...-113 SUFFIX MEANS PARTS ARE PACKED ON A 13 INCH REEL , 1600 pcs/REEL

6- LENS MOVEMENT IN RELATIONSHIP TO THE HOUSING IS:
.009" T.I.R. VERTICALLY
.007" T.I.R. HORIZONTALLY

7- FRONT AND REAR TERMINALS OF THE ASSEMBLY TO BE WITHIN .005 COPLANARITY

8- LED LEAD FRAME MATERIAL:
CORE MATERIAL = COPPER
1st PLATING = Ag-100% , THICKNESS ABOUT 90 MICRO-INCH
2nd PLATING = 90% Sn - 10% Pb , THICKNESS RANGE 200 to 800 MICRO-INCH

9- DIALIGHT PART NUMBERS =
591-2x01-102 591-2x01-107 591-2x01-113

10. DRY PACK PACKAGING CONSIST OF A DESICCANT, HUMIDITY INDICATOR CARD IN A VACUUM SEALED MOISTURE BARRIER BAG, MOISTURE SENSITIVITY LABEL LEVEL 2 ON OUTSIDE OF BAG, AS PER JEDEC STD. 033.

11. ATTENTION: OBSERVE PRECAUTIONS FOR HANDLING ELECTROSTATIC SENSITIVE DEVICES.

LED SCHEMATIC

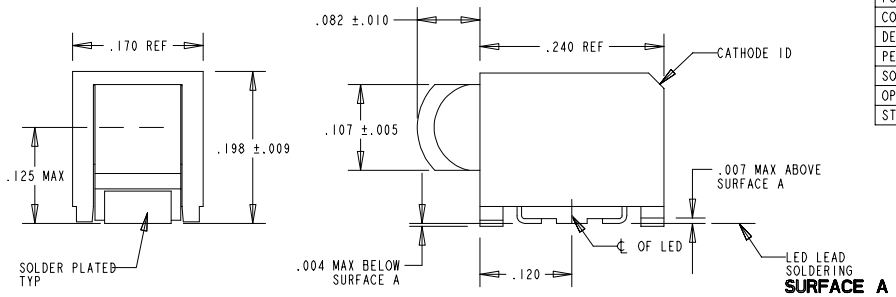

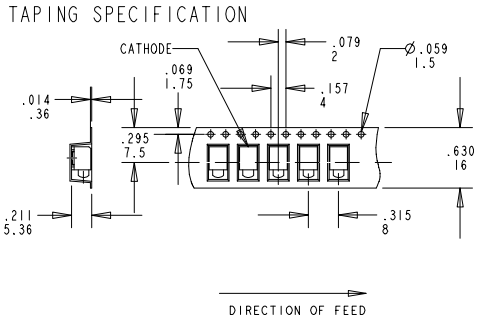

TOLERANCE: .004 UNLESS OTHERWISE SPECIFIED
MILLIMETER DIMENSIONS SHOWN FOR REFERENCE ONLY

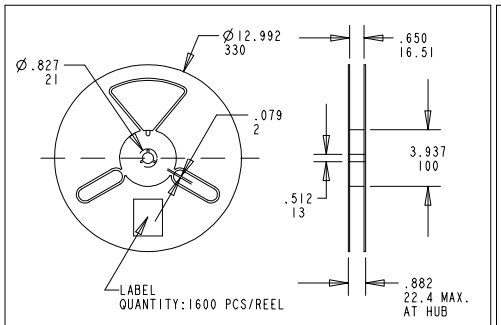

13 INCH DIA. REEL SPECIFICATIONS

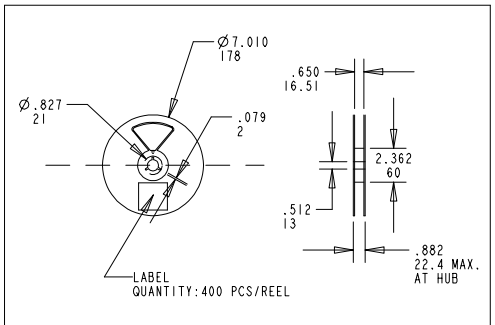

7 INCH DIA. REEL SPECIFICATIONS

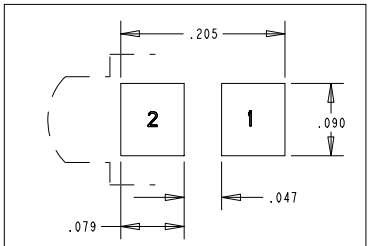

COMPONENT SIDE
RECOMMENDED PC BOARD LAND PATTERN
(DIM'S ±.004)

THIS DRAWING AND THE CONTENTS HEREIN ARE CONFIDENTIAL AND THE SOLE PROPERTY OF DIALIGHT. REPRODUCTION OF THIS DRAWING OR CONSTRUCTION OF ANY PARTS WITHIN THIS DRAWING ARE FORBIDDEN WITHOUT THE WRITTEN CONSENT OF DIALIGHT.

SCALE: DRAWING SCALE ALL DIM'S IN: INCHES (MM)	DRAWING NUMBER C-15785	REV G
TOLERANCES: UNLESS OTHERWISE SPECIFIED FRACTIONS: ±1/64 DECIMALS (.XX): ±.01 DECIMALS (.XXX): ±.005 DECIMALS (.XXXX): ±.0005 ANGLES: ±1°	TITLE SURFACE MOUNT CBI - SQUARE LENS	
FINISH:	MATERIAL	
FSCM 83330	Dialight SHEET OF	1501 ROUTE 34 SOUTH FARMINGDALE, NJ 07727 FAMILY TABLES: