Chipsmall Limited consists of a professional team with an average of over 10 year of expertise in the distribution of electronic components. Based in Hongkong, we have already established firm and mutual-benefit business relationships with customers from,Europe,America and south Asia,supplying obsolete and hard-to-find components to meet their specific needs.

With the principle of “Quality Parts,Customers Priority,Honest Operation,and Considerate Service”,our business mainly focus on the distribution of electronic components. Line cards we deal with include Microchip,ALPS,ROHM,Xilinx,Pulse,ON,Everlight and Freescale. Main products comprise IC,Modules,Potentiometer,IC Socket,Relay,Connector.Our parts cover such applications as commercial,industrial, and automotives areas.

We are looking forward to setting up business relationship with you and hope to provide you with the best service and solution. Let us make a better world for our industry!

Contact us

Tel: +86-755-8981 8866 Fax: +86-755-8427 6832
Email & Skype: info@chipsmall.com Web: www.chipsmall.com
Address: A1208, Overseas Decoration Building, #122 Zhenhua RD., Futian, Shenzhen, China

NUMBER C-5917631

3rd ANGLE PROJECTION

METRIC

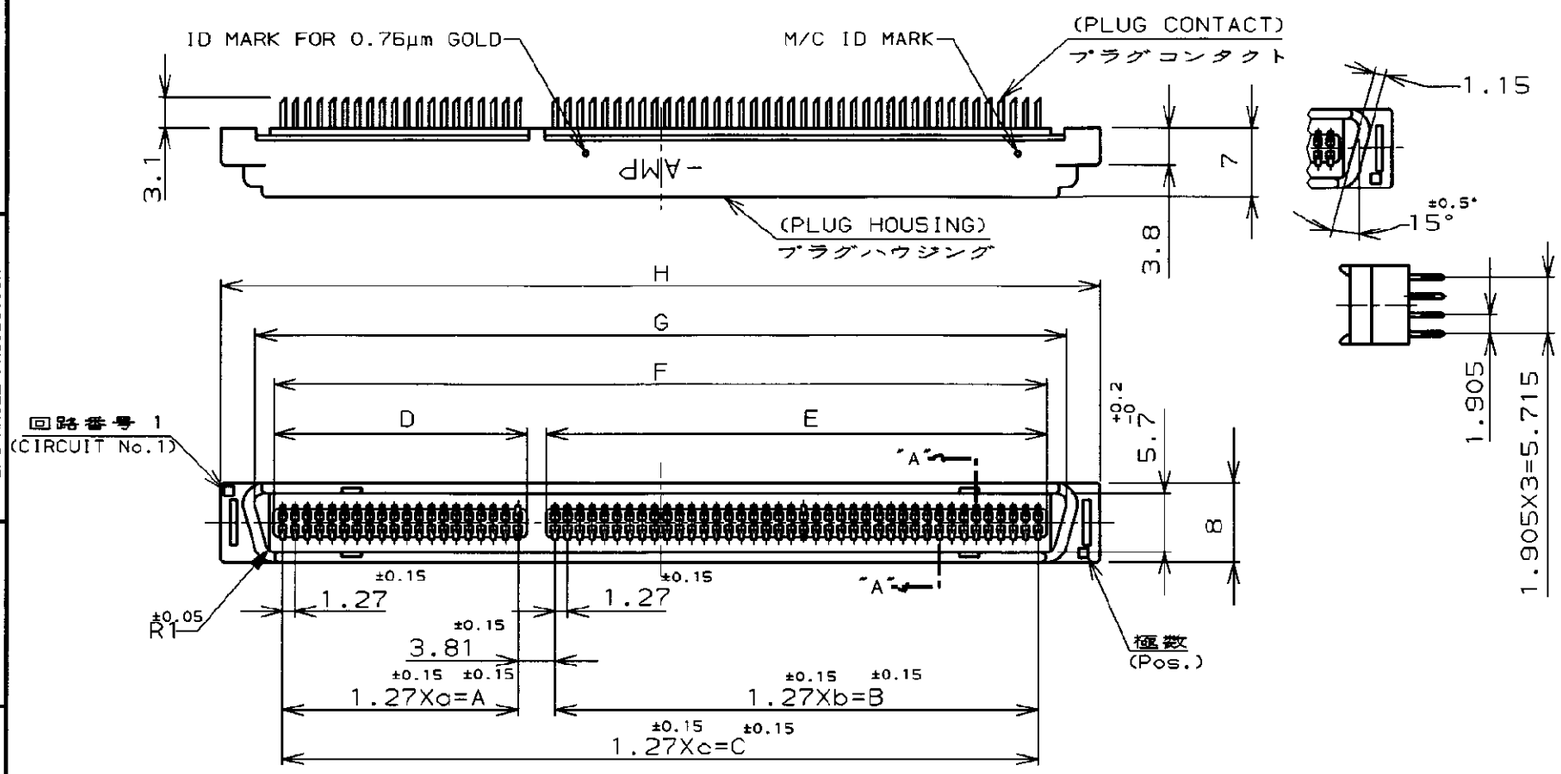

NOTE:

1. MATERIAL:HOUSING;THERMOPLASTICS (UL 94V-0) BLACK
   CONTACT:COPPER ALLOY
2. FINISH:CONTACT:Au AT CONTACT AREA
   TIN AT TINE, OVER Ni
3. THESE PRODUCTS WERE COATED BY ANTI-FLUX MIGRATION AGENT.
4. OBSOLETE

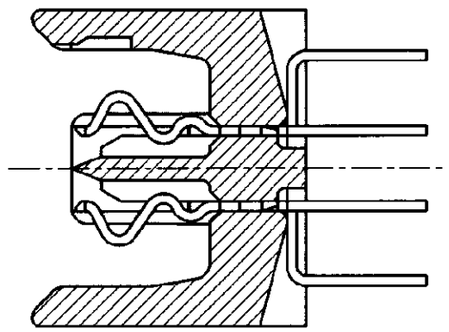

SECT."A"-"A"

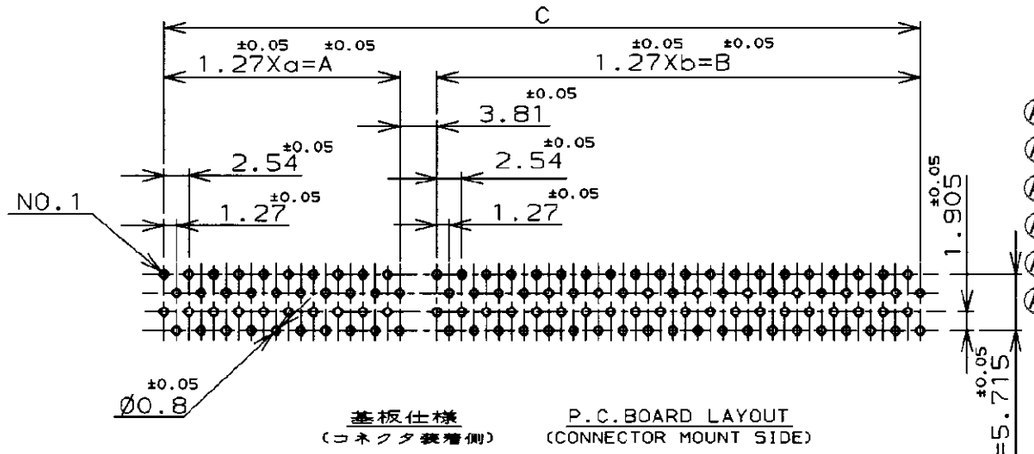

基板仕様
(コネクタ装着側)

P.C.BOARD LAYOUT
(CONNECTOR MOUNT SIDE)

	a	A	b	B	c	C	D	E	F	G	H	GOLD PLATING	Pos.	P/N
Ⓐ4	~~29~~	~~36.83~~	~~49~~	~~62.23~~	~~〃~~	~~102.87~~	~~38.63~~	~~64.03~~	~~104.67~~	~~108.11~~	~~115.45~~	~~0.76μm~~	~~160~~	~~2~~ ~~7~~
Ⓐ4	~~19~~	~~24.13~~	~~39~~	~~49.53~~	~~〃~~	~~77.47~~	~~25.93~~	~~51.33~~	~~79.27~~	~~82.71~~	~~90.09~~	~~0.76μm~~	~~120~~	~~2~~ ~~5~~
Ⓐ4	~~〃~~	~~〃~~	~~〃~~	~~〃~~	~~49~~	~~62.23~~	~~〃~~	~~〃~~	~~64.03~~	~~67.47~~	~~74.85~~	~~0.76μm~~	~~100~~	~~2~~ ~~4~~
Ⓐ4	~~〃~~	~~〃~~	~~〃~~	~~〃~~	~~39~~	~~49.53~~	~~〃~~	~~〃~~	~~51.33~~	~~54.77~~	~~62.15~~	~~0.76μm~~	~~80~~	~~2~~ ~~3~~
Ⓐ4	~~39~~	~~49.53~~	~~49~~	~~62.23~~	~~〃~~	~~115.57~~	~~51.33~~	~~64.03~~	~~117.37~~	~~120.81~~	~~128.19~~	~~0.3μm~~	~~180~~	~~-8~~
Ⓐ4	~~29~~	~~36.83~~	~~49~~	~~62.23~~	~~〃~~	~~102.87~~	~~38.63~~	~~64.03~~	~~104.67~~	~~108.11~~	~~115.45~~	~~0.3μm~~	~~160~~	~~7~~
	29	36.83	39	49.53	〃	90.17	38.63	51.33	91.97	95.41	102.79	0.3μm	140	-6
	19	24.13	39	49.53	〃	77.47	25.93	51.33	79.27	82.71	90.09	0.3μm	120	-5
	〃	〃	〃	〃	49	62.23	〃	〃	64.03	67.47	74.85	0.3μm	100	-4
	〃	〃	〃	〃	39	49.53	〃	〃	51.33	54.77	62.15	0.3μm	80	-3
	〃	〃	〃	〃	29	36.83	〃	〃	38.63	42.07	49.45	0.3μm	60	-2
	〃	〃	〃	〃	19	24.13	〃	〃	25.93	29.37	36.75	0.3μm	40	5917631-1

注記:

1. 材料:ハウジング;熱可塑性樹脂 (UL 94V-0) 色:黒
   コンタクト:銅合金
2. 表面仕上げ;
   コンタクト:全面ニッケル下地めっき
   接触部金めっき、脚部すずめっき
3. 本製品はフラックス上がり防止処理済み

鉛フリー
LEAD FREE

LTR	DESCRIPTION	DATE	DWN	APVD
A	REVISED PER ECR-12-013341	28MAR2013	K.M	E.T
O	RELEASED (FJB0-0582-04)	09JUN04	T.K	I.E

WIRE RANGE mm² (AWG -)	INSULATION DIA - mmø
MATERIAL 1	FINISH 2
CHK. I.ENOMOTO 09JUN04	DE. T.KAWAMAE 09JUN04
	APP. I.ENOMOTO 09JUN04

TE Connectivity

NAME: AMP FH CONNECTOR PLUG (VERTICAL)

GENERAL TOLERANCE: 0<寸≤10 ±0.2; 10<寸≤30 ±0.25; 30<寸≤100 ±0.3; ANGLES ±3°

SIZE B | LOC J | NUMBER C-5917631

SCALE NTS | REV. A | SHEET 1 OF 1

CUSTOMER DRAWING

DIMENSIONS IN MILLIMETERS. DO NOT SCALE PRINT

PRINT DIST

AMP-J REV.10/'83