Chipsmall Limited consists of a professional team with an average of over 10 year of expertise in the distribution of electronic components. Based in Hongkong, we have already established firm and mutual-benefit business relationships with customers from,Europe,America and south Asia,supplying obsolete and hard-to-find components to meet their specific needs.

With the principle of “Quality Parts,Customers Priority,Honest Operation,and Considerate Service”,our business mainly focus on the distribution of electronic components. Line cards we deal with include Microchip,ALPS,ROHM,Xilinx,Pulse,ON,Everlight and Freescale. Main products comprise IC,Modules,Potentiometer,IC Socket,Relay,Connector.Our parts cover such applications as commercial,industrial, and automotives areas.

We are looking forward to setting up business relationship with you and hope to provide you with the best service and solution. Let us make a better world for our industry!

Contact us

Tel: +86-755-8981 8866 Fax: +86-755-8427 6832
Email & Skype: info@chipsmall.com Web: www.chipsmall.com
Address: A1208, Overseas Decoration Building, #122 Zhenhua RD., Futian, Shenzhen, China

THIS DRAWING IS UNPUBLISHED. RELEASED FOR PUBLICATION 2006
© COPYRIGHT 2006 BY - ALL RIGHTS RESERVED.

LOC	DIST
A1	-

REVISIONS

P	LTR	DESCRIPTION	DATE	DWN	APVD
	H2	REVISED PER ECO-11-005030	24MAR2011	RK	HMR

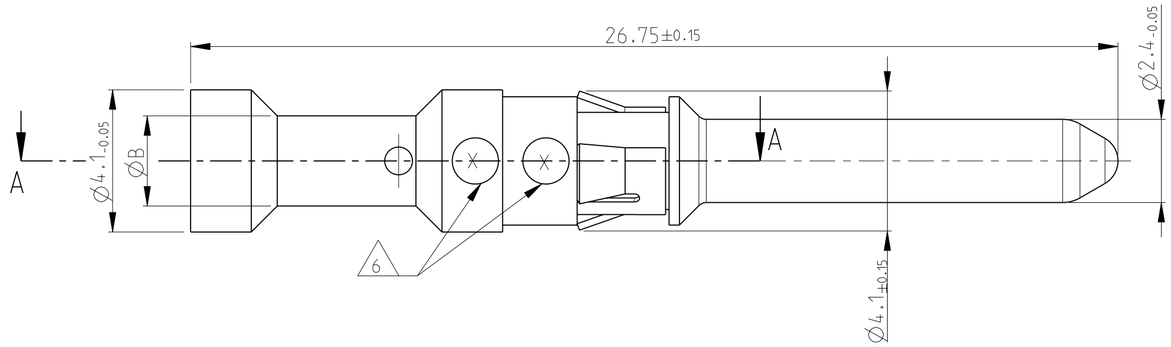

SECTION A-A

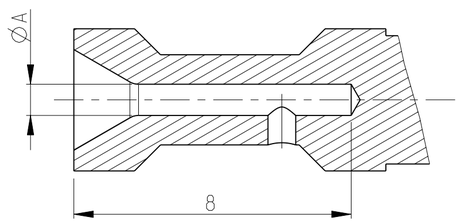

NOTES:

1. MATERIAL SEE TABLE
2. SURFACE SEE TABLE
3. ASSEMBLY WEIGHT SEE TABLE
4. PACKAGING: 50 PIECES IN POLYBAG
5. PACKAGING: 500 PIECES IN POLYBAG & CARTON
6. CROSS-SECTION MARKING
7. NO VENTILATION HOLE REQUIRED AT CROSS SECTION >4 mm^2
8. SUITABLE SOCKET CONTACT: PN 1105301
9. SUITABLE INSERTS: SERIES HVT
10. SUITABLE CRIMP TOOL: PN 1-1105851-8
11. SUITABLE INSERTION TOOL: PN 0-1102855-6
12. SUITABLE EXTRACTION TOOL: PN 0-1102855-3
13. STANDARDS: DIN EN 61984, DIN EN 60664-1

0.00142	0.00144	0.00148	0.00145	0.00149	0.00150	0.00144	0.00148	0.00133	0.00142	0.00144	0.00148	0.00145	0.00149	0.00150	ASSEMBLY WEIGHT IN (Kg) 3						
1															Pin Contact 4.0 mm^2	CuZn39Pb3 F43	GOLD PLATING	2.85	3.9	6	1
	1														Pin Contact 2.5 mm^2			2.2	3.2	5	
		1													Pin Contact 1.5 mm^2			1.8	3.0	4	
			1												Pin Contact 0.75-1.0 mm^2			1.45	2.6	3	
				1											Pin Contact 0.5 mm^2			1.1	2.6	2	
					1										Pin Contact 0.13-0.4 mm^2			0.9	2.6	1	
						1									Pin Contact 14 AWG		SILVER PLATING	2.0	3.2	8	
							1								Pin Contact 12 AWG			2.55	3.6	9	
								1							Pin Contact 10 AWG			3.2	4.1	7	
									1						Pin Contact 4.0 mm^2			2.85	3.9	6	
										1					Pin Contact 2.5 mm^2			2.2	3.2	5	
											1				Pin Contact 1.5 mm^2			1.8	3.0	4	
												1			Pin Contact 0.75-1.0 mm^2			1.45	2.6	3	
													1		Pin Contact 0.5 mm^2			1.1	2.6	2	
														1	Pin Contact 0.13-0.4 mm^2			0.9	2.6	1	
4 5-2	4-2	3-2	2-2	1-2	6-2	8-2	9-1	7-2	5-1	4-1	3-1	2-1	1-1	6-1	DESCRIPTION	MATERIAL 1	SURFACE 2	ØA	ØB	CROSS SECTION MARKING 6	ITEM NO
5 5-9	4-9	3-9	2-9	1-9	6-9	8-8	9-8	7-8	5-8	4-8	3-8	2-8	1-8	6-8							
HVT-C-Sti.Au.4.0 mm^2	HVT-C-Sti.Au.2.5 mm^2	HVT-C-Sti.Au.1.5 mm^2	HVT-C-Sti.Au.0.75-1.0 mm^2	HVT-C-Sti.Au.0.5 mm^2	HVT-C-Sti.Au.0.13-0.4 mm^2	HVT-C-Sti.Ag.AWG.14	HVT-C-Sti.Ag.AWG.12	HVT-C-Sti.Ag.AWG.10	HVT-C-Sti.Ag.4.0 mm^2	HVT-C-Sti.Ag.2.5 mm^2	HVT-C-Sti.Ag.1.5 mm^2	HVT-C-Sti.Ag.0.75-1.0 mm^2	HVT-C-Sti.Ag.0.5 mm^2	HVT-C-Sti.Ag.0.13-0.4 mm^2	ORDERING TEXT						

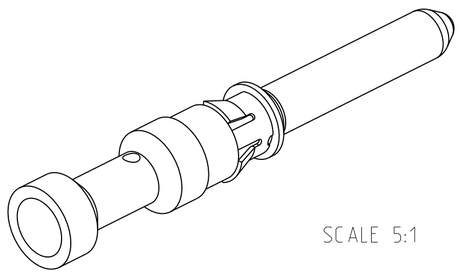

SCALE 5:1

THIS DRAWING IS A CONTROLLED DOCUMENT.

DIMENSIONS: mm

TOLERANCES UNLESS OTHERWISE SPECIFIED: ISO 8015 DIN ISO 2768 mH-E DIN 16901-120
0 PLC ±
1 PLC ±
2 PLC ±
3 PLC ±
4 PLC ±
ANGLES ±

MATERIAL 1

FINISH 2

DWN	G.WROBLEWSKI	04.SEP.2007
CHK	T.SCHNURPFEIL	04.SEP.2007
APVD	T.SCHNURPFEIL	04.SEP.2007
PRODUCT SPEC	108-74035	
APPLICATION SPEC	114-74013	
WEIGHT	-	

TE Connectivity

NAME: CLIP - -

SIZE	CAGE CODE	DRAWING NO	RESTRICTED TO
A2	00779	C-1105300	-

CUSTOMER DRAWING

SCALE	SHEET	OF	REV
5:1	1	1	H2

1471-9 (3/11)

Pro/ENGINEER DRAWING