Chipsmall Limited consists of a professional team with an average of over 10 year of expertise in the distribution of electronic components. Based in Hongkong, we have already established firm and mutual-benefit business relationships with customers from,Europe,America and south Asia,supplying obsolete and hard-to-find components to meet their specific needs.

With the principle of “Quality Parts,Customers Priority,Honest Operation,and Considerate Service”,our business mainly focus on the distribution of electronic components. Line cards we deal with include Microchip,ALPS,ROHM,Xilinx,Pulse,ON,Everlight and Freescale. Main products comprise IC,Modules,Potentiometer,IC Socket,Relay,Connector.Our parts cover such applications as commercial,industrial, and automotives areas.

We are looking forward to setting up business relationship with you and hope to provide you with the best service and solution. Let us make a better world for our industry!

Contact us

Tel: +86-755-8981 8866 Fax: +86-755-8427 6832
Email & Skype: info@chipsmall.com Web: www.chipsmall.com
Address: A1208, Overseas Decoration Building, #122 Zhenhua RD., Futian, Shenzhen, China

PASSMASS	ABMASS

DWG NO C-6-1579008-3

PROJECT NO.:

USED ON

Pos.#	Titel	PN	Material	Surface	Heat Treat.	Qty
2	Dism. sleeve	6-1579008-5	Springsteel	Nickel-pl.		1

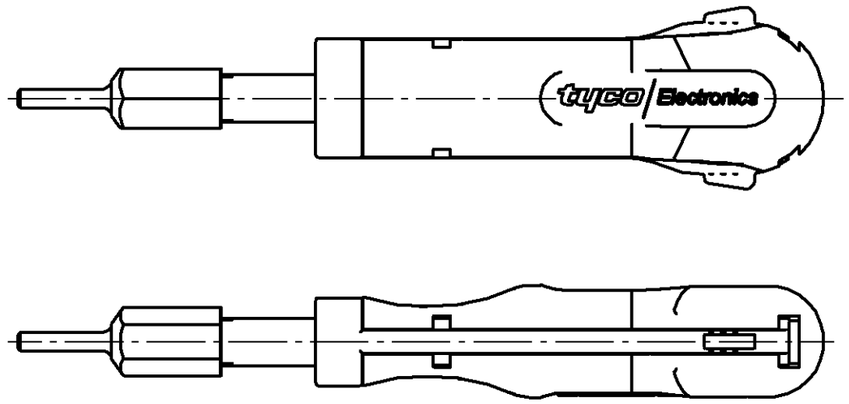

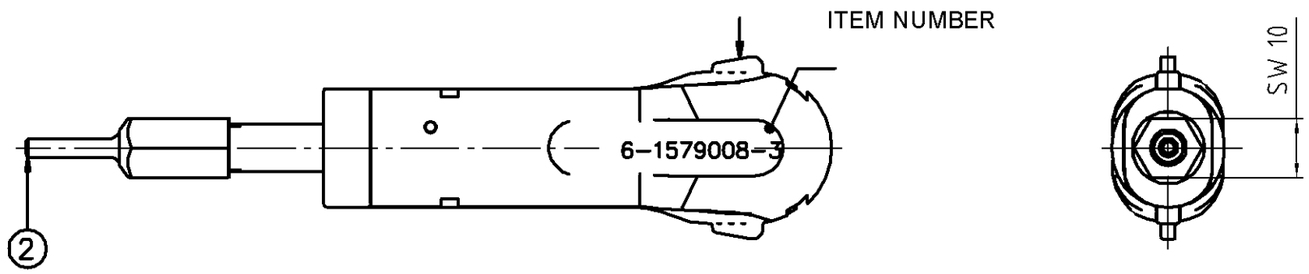

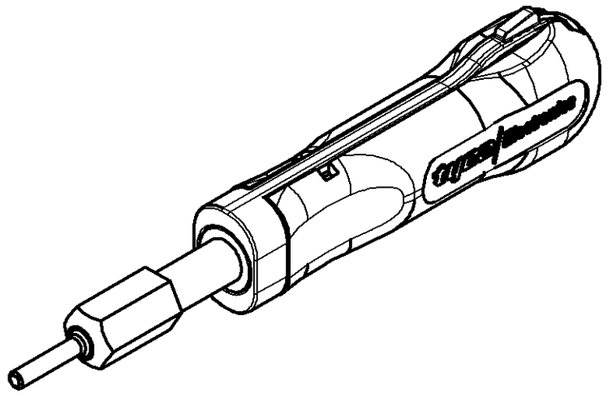

FOR CONTACTS / HOUSINGS:

HDR Contact: 203816, 166046, 203816, 203874, 166047, 203874

FREIMASSTOLERANZEN NACH DIN 7168 (WERTE IN mm)
1) ABWEICHEND VON DIN 7168 2) LÄNGE DES KÜRZEREN SCHENKELS

NENNMASS-		ÜBER	0.5	3	6	30	120	400
BEREICH 1)		BIS	3	6	30	120	400	1000
ABMASSE	LÄNGEN-	FEIN	~~±0.05~~	~~±0.05~~	~~±0.1~~	~~±0.15~~	~~±0.2~~	~~±0.3~~
	MASSE	MITTEL	±0.1	±0.1	±0.2	±0.3	±0.5	±0.8
	RADIEN U. FASEN		±0.2	±0.5	±1	±2	±4	±4
WINKELABMASSE 1) 2)			±1°	±1°	±30'	±20'	±10'	±5'

GENERAL TOLERANCES ACC. TO DIN 7168 (VALUES IN mm)
1) DEVIATING FROM DIN 7168 2) LENGHT OF SHORT ANGLE SIDE

LOC AI

DIST –

TEIL IM BEREICH X__ MIT PN/STRICH-NR. (-1 WIE GEZ.), REVISION-STAND UND LIEFERANTENSYMBOL GEKENNZEICHNET

PART TO BE MARKED WITH PN/DASH NO. (-1 AS SHOWN), REV. STATUS AND VENDORS MARK IN AREA X__

OBERFLÄCHENVERGLEICHSTABELLE

DIN 3141 R3 | R_a in µm DIN ISO 1302 | max | 6.3 | 1.6 | 0.4 | 0.1 | BOHRG. OHNE ANGABE 12.5

ALLE UNBEMASSTE KANTEN 0.2x45° ENTGRATET

REMOVE BURRS, BREAK SHARP EDGES 0.2x45° | HOLE NOT SPEC.

P	LTR	REVISION RECORD	DATE	DWN	APVD
	–	–	–	–	–
	–	–	–	–	–
	A	ECN EGC0-0000-00	00.00.2000	–	–

FINISH

DIMENSIONS: mm

TOLERANCES UNLESS OTHERWISE SPECIFIED:
n. ISO 8015
n. ISO 2768 - mH -E
n. DIN 16901 - 140
0 PLC ±-
1 PLC ±-
2 PLC ±-
3 PLC ±-
4 PLC ±-

ANGLES± -

SURFACE TEXTURE -

DWN	h. fink	16.03.2007
CHK	G. Stegmayer	19.03.2007
APVD	G. Stegmayer	19.03.2007

MATERIAL 1.2242 59CrV4

HEAT TREAT

Gewicht / Weight 0,000kg

tyco Electronics

tyco Electronics AMP GmbH
D - 64625 Bensheim

NAME EXTRACTION TOOL
Entriegelungswerkzeug

SCALE	SIZE	DRAWING NO	SHEET	REV
1:1	A3	C-6-1579008-3	1 OF 1	A

THIS DRAWING IS A CONTROLLED DOCUMENT FOR AMP INCORPORATED. IT IS SUBJECT TO CHANGE AND THE CONTROLLING ENGINEERING ORGANIZATION SHOULD BE CONTACTED FOR THE LATEST REVISION.

DIESES ZEICHNUNGSDOKUMENT WIRD DURCH AMP INCORPORATED KONTROLLIERT. ÄNDERUNGEN, DIE DEN TECHNISCHEN FORTSCHRITT DIENEN, SIND VORBEHALTEN. DEN JEWEILS LETZTGÜLTIGEN ÄNDERUNGSSTAND ERFAHREN SIE AUF ANFRAGE

THIS INFORMATION IS CONFIDENTIAL AND IS DISCLOSED TO YOU ON CONDITION THAT NO FURTHER DISCLOSURE IS MADE BY YOU TO OTHER THAN AMP PERSONNEL WITHOUT WRITTEN AUTHORIZATION FROM AMP INCORPORATED. D - 5225 LANGEN

AMP 3306-7 REV 23FEB95