Chipsmall Limited consists of a professional team with an average of over 10 year of expertise in the distribution of electronic components. Based in Hongkong, we have already established firm and mutual-benefit business relationships with customers from,Europe,America and south Asia,supplying obsolete and hard-to-find components to meet their specific needs.

With the principle of “Quality Parts,Customers Priority,Honest Operation,and Considerate Service”,our business mainly focus on the distribution of electronic components. Line cards we deal with include Microchip,ALPS,ROHM,Xilinx,Pulse,ON,Everlight and Freescale. Main products comprise IC,Modules,Potentiometer,IC Socket,Relay,Connector.Our parts cover such applications as commercial,industrial, and automotives areas.

We are looking forward to setting up business relationship with you and hope to provide you with the best service and solution. Let us make a better world for our industry!

Contact us

Tel: +86-755-8981 8866 Fax: +86-755-8427 6832
Email & Skype: info@chipsmall.com Web: www.chipsmall.com
Address: A1208, Overseas Decoration Building, #122 Zhenhua RD., Futian, Shenzhen, China

used for: D-SUB

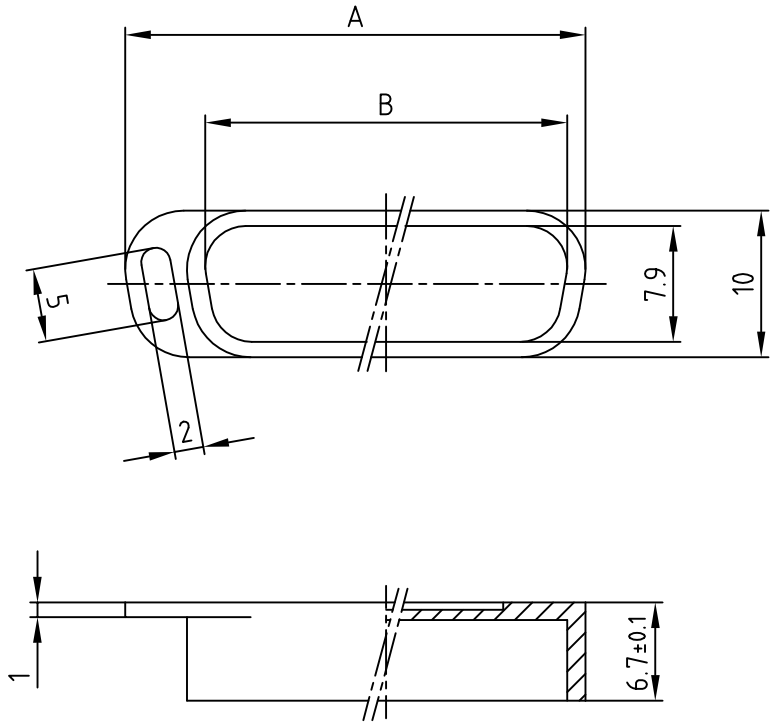

TO PREVENT DAMAGE AT LOW TEMPERATURES NO IMPACT OR EXTREM MECHANICAL LOAD SHOULD APPLIED TO THE CAP.
MECHANICAL LOAD SHOULD BE APPLIED ABOVE 0° C

POS.	A	B	Part No.
9	22.9	16.5	600X518009X
15	31.4	24.7	600X518015X
25	44.7	38.3	600X518025X
37	61.2	54.5	600X518037X

RoHS compliant

THIS DRAWING MAY NOT BE COPIED OR REPRODUCED IN ANY WAY, AND MAY NOT BE PASSED ON TO A THIRD PARTY WITHOUT WRITTEN PERMISSION. OWNERSHIP AND COPYRIGHT OF CONEC GmbH
DO NOT ALTER CAD DRAWING BY HAND

rev.	description	date	name
a	Original		

tolerance DIN 16901 - 150

dim. in mm

	date	name
2015	date	name
drawn	04.03.	Henneboel
appd.	04.03.	Lehmenkühler
norm		
d-old		

CONEC®

scale: 2:1

material: ABS, Nickel plated

title: DUST CAP
for socket connector
9 - 37pos.

dwg no: 16V2IM5A

DIN-A 4

sh: 1/1

part no: See Table