Chipsmall Limited consists of a professional team with an average of over 10 year of expertise in the distribution of electronic components. Based in Hongkong, we have already established firm and mutual-benefit business relationships with customers from,Europe,America and south Asia,supplying obsolete and hard-to-find components to meet their specific needs.

With the principle of “Quality Parts,Customers Priority,Honest Operation,and Considerate Service”,our business mainly focus on the distribution of electronic components. Line cards we deal with include Microchip,ALPS,ROHM,Xilinx,Pulse,ON,Everlight and Freescale. Main products comprise IC,Modules,Potentiometer,IC Socket,Relay,Connector.Our parts cover such applications as commercial,industrial, and automotives areas.

We are looking forward to setting up business relationship with you and hope to provide you with the best service and solution. Let us make a better world for our industry!

# Contact us

Tel: +86-755-8981 8866 Fax: +86-755-8427 6832
Email & Skype: info@chipsmall.com Web: www.chipsmall.com
Address: A1208, Overseas Decoration Building, #122 Zhenhua RD., Futian, Shenzhen, China

used for: D-SUB

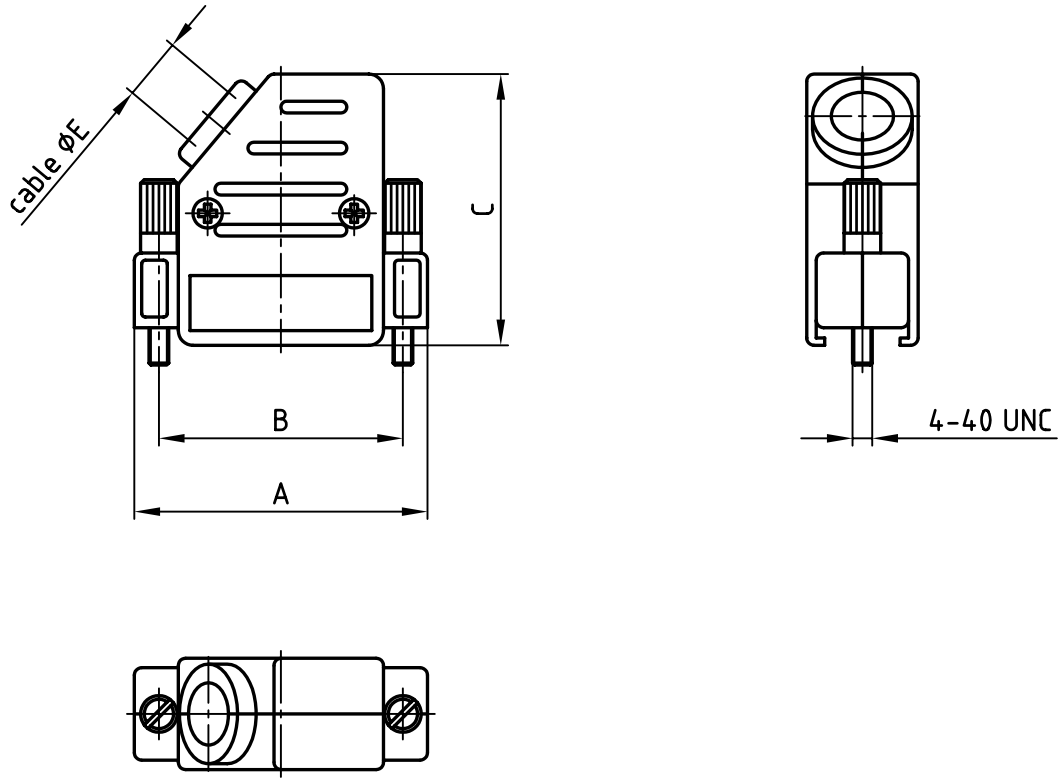


| No. of pos. | A | B | C | D | ØE | Part No: |
|---|---|---|---|---|---|---|
| 9 | 31.5 | 25.0 | 37.0 | 15.2 | 8.5 | **600X57009X** |
| 15 | 40.0 | 33.3 | 37.0 | 15.2 | 8.5 | **600X57015X** |
| 25 | 53.5 | 47.0 | 41.0 | 15.2 | 11.0 | **600X57025X** |
| 37 | 70.0 | 63.5 | 41.0 | 15.2 | 11.0 | **600X57037X** |
| 50 | 67.8 | 61.1 | 41.0 | 18.2 | 12.0 | **600X57050X** |

Directive 2002/95/EC
„RoHS"
Compliant

APPROVAL # FREIGABE # DEBLOCAGE # AUTOR/ZACION # APPROVAL

CUSTOMER APPROVAL DATE:

NAME: TITLE:

COMPANY NAME:

APPROVAL # FREIGABE # DEBLOCAGE # AUTOR/ZACION # APPROVAL

THIS DRAWING MAY NOT BE COPIED OR REPRODUCED IN ANY WAY, AND MAY NOT BE PASSED ON TO A THIRD PARTY WITHOUT WRITTEN PERMISSION. OWNERSHIP AND COPYRIGHT OF CONEC GmbH

DO NOT ALTER CAD DRAWING BY HAND

| rev. | description | date | name |
|---|---|---|---|

tolerance

dim. in mm

| 2002 | date | name |
|---|---|---|
| drawn | 28.02. | Schmidt |
| appd. | 28.02. | E. Mickenbecker |
| norm | DIN41652 | |
| d-old | KAT116QA | |

CONEC®

scale: 1:1

material: ABS UL 94 V-0
Metallized

title:

# Plastic hood

side cable exit, with jack screws
9 - 50 pos.

dwg no: 16K1A673

AutoCAD 2000

DIN-A 4

sh: 1/1

part no: SEE TABLE